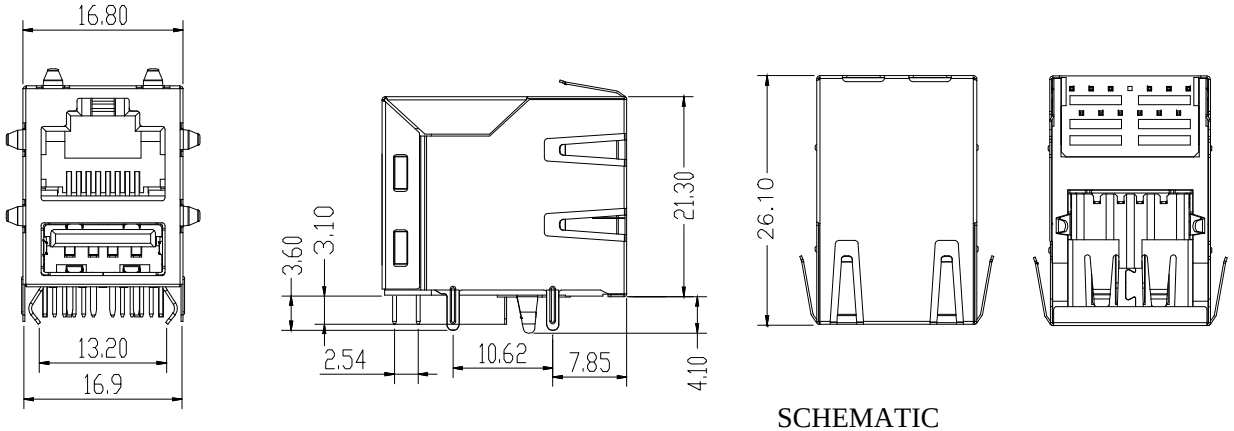

Feature:

. Complies with IEEE standards and all Gigabit specifications including 350uH with 8mA DC bias

. Inter grated Mag-modular design provides higher reliability and conserves minimizing PCB space

. Housing: Thermoplastic PBT+30%GF UL94V0 rated

. Contact :Phosphor Bronze(C5191),Gold plated on contact area 5u" .

. Input Terminal : Brass(C2680)

. Metal shielding: Copper alloy with Nickel plated(C2680),

. USB Housing Color: Black

. Operating temperature: -40°C to +85°C

. Storage temperature: -40 ^{o}C to +85°C

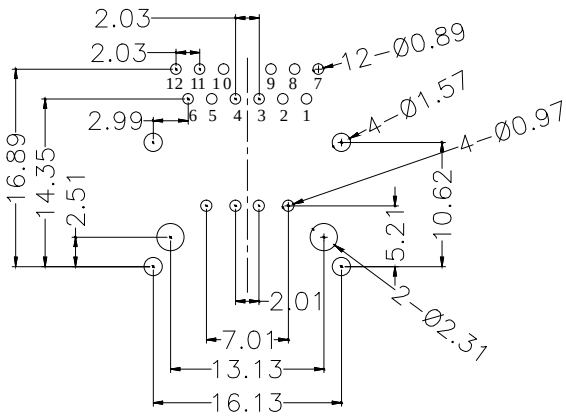

SUGGESTED PCB LA YOUT (TOP VIEW)

DIMENSIONAL TOLERANCE: .XX ±0.05[0.001]

SCHEMATIC

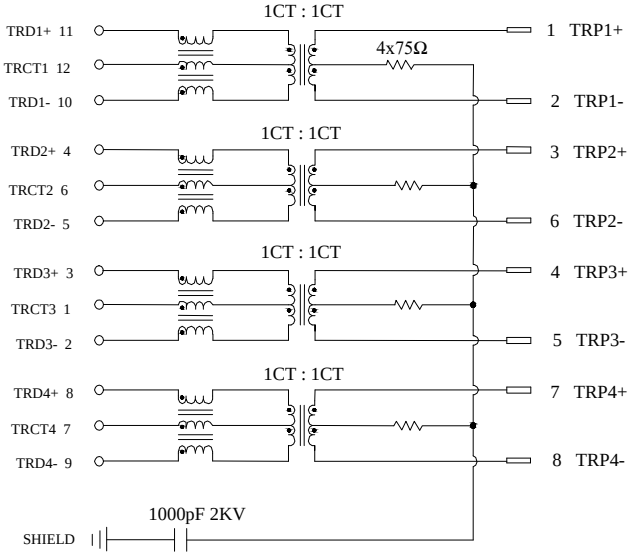

Electrical Specifications: (25°C)

Insertion Loss dB Max	Return Loss dB Min			Common Mode Rejection dB TYP		Crosstalk dB TYP	Hi-Pot (vrms)
1~100MHz	1~30MHz	60~80MHz	80~100MHz	1~100MHz	150MHz	1~100MHz	
-1.0	-18.0	-12.0	-10.0	-30.0	-20.0	-30.0	1200/1mA

ORDER CODE: A-MJU-8-DA-xTP-S1

K:Gold flash selective tin
P: Au15μ" selective tin
H: Au30μ" selective tin

RoHS compliant
Unit: mm

Scale	Free
TOLERANCE	
X.X	±0.38
X.XX	±0.25
X.XXX	±0.13
DIM	TOL
Angle	TOL

Id.	Modification	Date	Name
0	Drawn	06.01.2022	Luca

	Date	Name
Drawn	06.01.2022	Luca
Approved	06.01.2022	Luca

ASSMANN WSW components

Description: Modular Connector
RJ45 Jack + USB2.0 AF

ASSMANN WSW-No.
A-MJU-8-DA-xTP-S1

Drawing-No.
ASS 9196 CO

rev00

Customer-No.

Sheet
1/1

SV4894