ANATECH ELECTRONICS INC
RF & Microwave Filters & Products

33 GHz High Pass Filter

Part Number: AE33000H9885

ISO 9001 CERTIFIED

Electrical Specifications

Frequency Range: 33-60 GHz
Insertion Loss: 2.5 dB Max
Rejection: >40 dB @ 30 GHz
Impedance: 50 Ohms In/Out
Power Handling: 20 W CW

Mechanical

Mounting Method: Through Holes
Connector Type: 1.85mm (F)
Dimensions: 0.92 x 0.63 x 0.24 in
23.35 x 16 x 6 mm

Environmental

Operating Temperature: -15°C to +45°C
Storage Temperature: -35°C to +55°C

Outline Drawing:

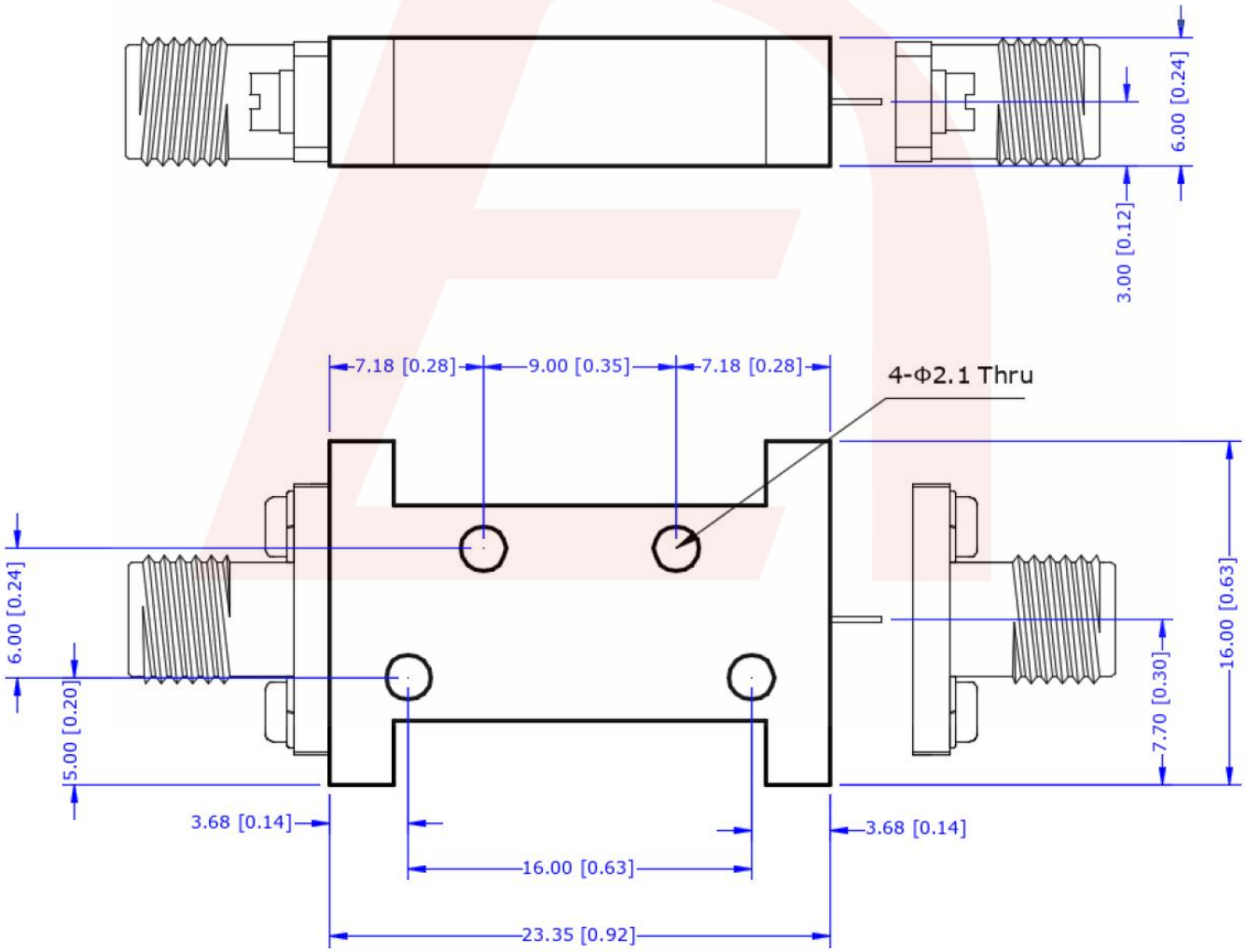

DS-H9885-04012015-Rev0

70 Outwater Lane Phone: (973) 772-4242
Garfield, NJ 07026 Fax : (973) 321-3941
Email: sales@anatechelectronics.com
Web: www.anatechelectronics.com