REVISIONS					
REV	ECO	DESCRIPTION	DATE	BY	APPR
A3	-	RELEASE NEW DWG FORMAT	21/OCT/13	DRP	-
A4	C1070S	UPDATE DRAWING	28/JUN/19	JOE	TOMMY
A5	C1298S	UPDATE PLATING	14/SEP/20	SULLEN	TOMMY
A6	-	UPDATE THE WIRE GAGE	09/OCT/23	LUCAS	TOMMY

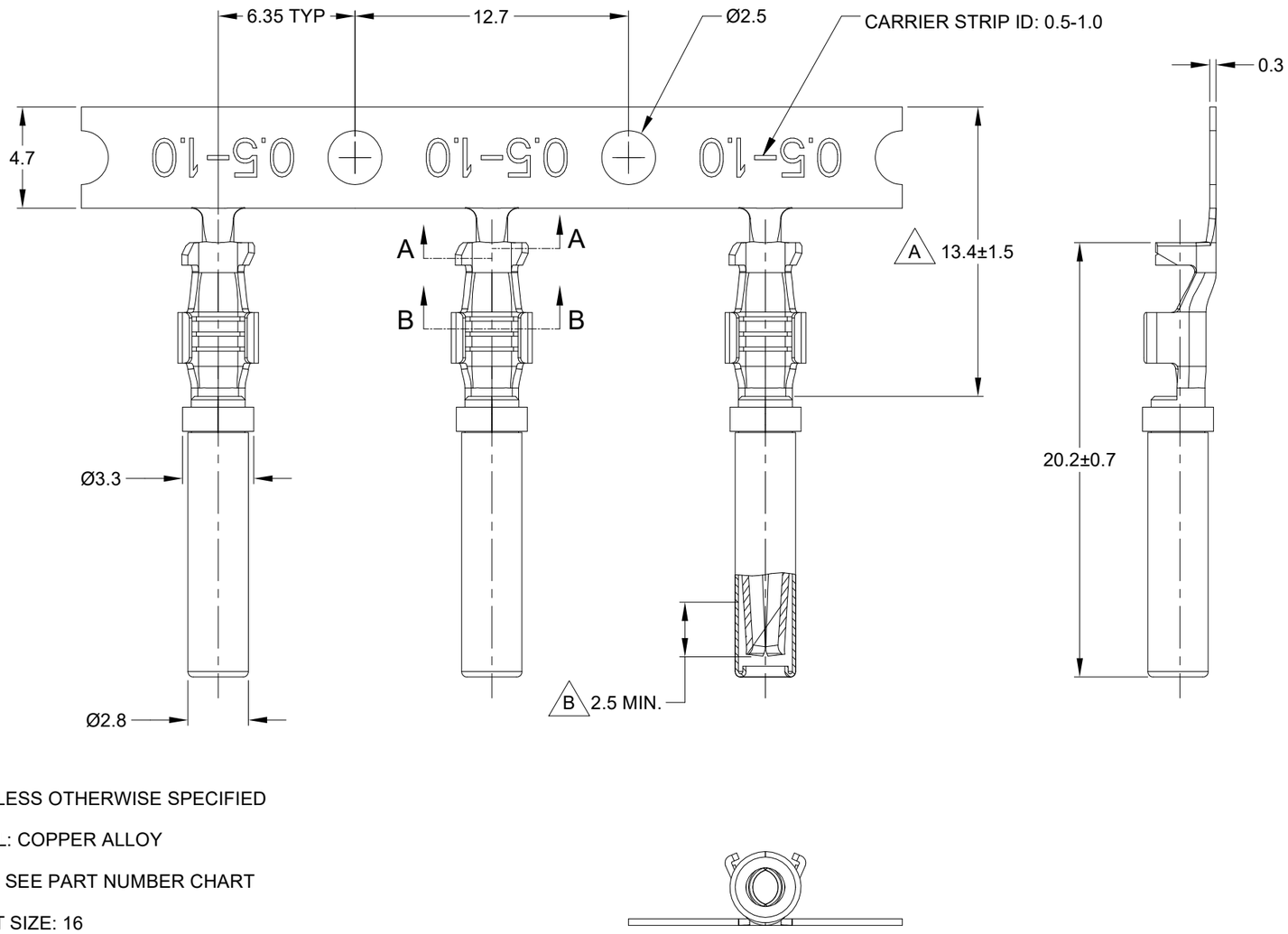

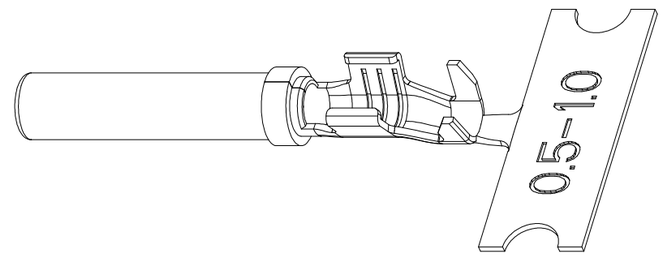

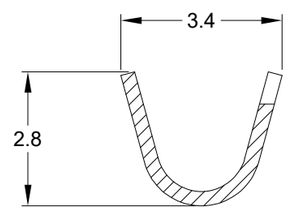

SECTION A-A
SCALE - 2:1

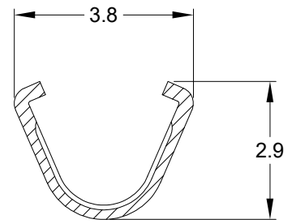

SECTION B-B
SCALE - 2:1

NOTES: UNLESS OTHERWISE SPECIFIED

1. MATERIAL: COPPER ALLOY

2. PLATING: SEE PART NUMBER CHART

3. CONTACT SIZE: 16

4. SPECIFICATIONS:
   4.1 CURRENT RATING: 13 AMPS
   4.2 CONTACT MILLIVOLT DROP: 100 MILLIVOLT DROP @ 13 AMP TEST CURRENT.
   4.3 RoHS COMPLIANT

5. RECOMMENDED WIRE RANGE: 16 - 20 AWG (1.0 - 0.5mm²)
   RECOMMENDED INSUL O.D: 1.40 - 2.54MM (0.055 - 0.1 INCH)

6. PACKAGE: 4000 PCS/REEL

7. AVAILABLE APPLICATORS: MFX-3950-K OR MFX-3950-G

8. ALL DIMENSIONS ARE FOR REFERENCE USE ONLY

PART NUMBER CHART		
PLATING	PART NUMBER	PLATING DESCRIPTION
NICKEL	AT62-16-0622	SELECTIVE TIN OVER NICKEL OVERALL IN A ZONE
GOLD	AT62-16-0644	SELECTIVE GOLD FLASH OVER NICKEL OVERALL IN B ZONE OR ENTIRE CONTACT
TIN	AT62-16-0677	TIN OVER NICKEL OVERALL

QUANTITY	PART NUMBER	DESCRIPTION	ITEM
	SEE PART NUMBER CHART	REF: 1062-16-0622, 1062-16-0644, 1062-16-0677	

MATERIALS LIST

UNLESS OTHERWISE SPECIFIED
1) All dimensions are in metric(mm).
2) Tolerances are as follows:
1 PL DEC ±0.30
2 PL DEC ±0.15
3 PL DEC ±0.08
Fractions ±1/64
Angles ±1°
3) Note reference = X

MATERIAL SPECIFICATIONS:

PROCESS SPECIFICATIONS:

NEXT ASS'Y:

SIGNATURES		DATE
DRAWN:	LUCAS.CHAI	09/OCT/23
CHECKED:	ORION.LI	10/OCT/23
ENGINEER:		
APPROVAL:	TOMMY.XIE	12/OCT/23
CUSTOMER:		

THIS DRAWING IS SUPPLIED FOR INFORMATION ONLY. DESIGN FEATURES, SPECIFICATIONS AND PERFORMANCE DATA SHOWN HEREON ARE THE PROPERTY OF THE AMPHENOL CORPORATION. NO RIGHTS OF REPRODUCTION ARE IMPLIED. ALL DIMENSIONS ARE SUBJECT TO NORMAL MANUFACTURING VARIATIONS.

Amphenol

Sine Systems - www.amphenol-sine.com
44724 Morley Drive
Clinton Township, MI 48036

CONTACT, SOCKET, STAMPED, SIZE 16, 16-20 AWG, A SERIES

SIZE	TYPE	DWG NO:	REVISION
B	C-	AT62-16-06XX	A6

SCALE: NONE SHEET 1 OF 1

TITLE: SOCKET, STAMPED, SIZE 16, 16-20 AWG, A SERIES
DWG NO: AT62-16-06XX
REV: A6
SH: 1
OF: 1