Name	Ferrite Chip EMI Suppressors EBMS-100505	COMPONENT SPECIFICATION		1/8
		SPEC#	EBMS100505H221	

1. Scope

This specification applies to the EBMS-1005 series Ferrite Chip EMI suppressors.

2. Standard and Atmospheric Conditions

Unless otherwise specified the standard range of atmospheric conditions for making measurements and tests is as follows:

Ambient temperature : 20±15℃

Relative humidity : 30~70%

If there may be any doubt on the results, measurements shall be made within the following limits :

Ambient temperature : 25±5℃

Relative humidity : 30~70%

3. Ratings

PART NO	IMPEDANCE (Ω) AT100 MHz 500mV	DC RESISTANCE (Ω) Max	※ RATED CURRENT (mA) Max
EBMS100505H221	220±25%	0.8	200

※The maximum rated current is measured at ambient temperature increasing to 40 ºC within 2 hours.

4. Dimensions

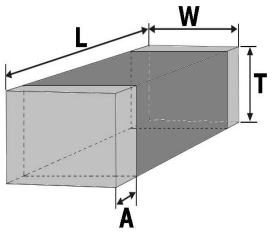

OPERATING TEMP. RANGE : -55℃ ~ +125℃

STORAGE TEMP. RANGE : -40℃ ~ +85℃

unit: mm (inch)

TYPE	L	W	T	A
EBMS-1005	1±0.05 (0.039±0.002)	0.5±0.05 (0.02±0.002)	0.5±0.05 (0.02±0.002)	0.1~0.3 (0.004~0.012)

5. The Place of Origin :

Taichung, Taiwan

PLANNED BY	CHECKED BY	APPROVED BY	
Marco	Lun	Tina Hsu	鈺鎧文件中心 發行章

Name	Ferrite Chip EMI Suppressors EBMS-100505	COMPONENT SPECIFICATION		2/8
		SPEC#	EBMS100505H221	

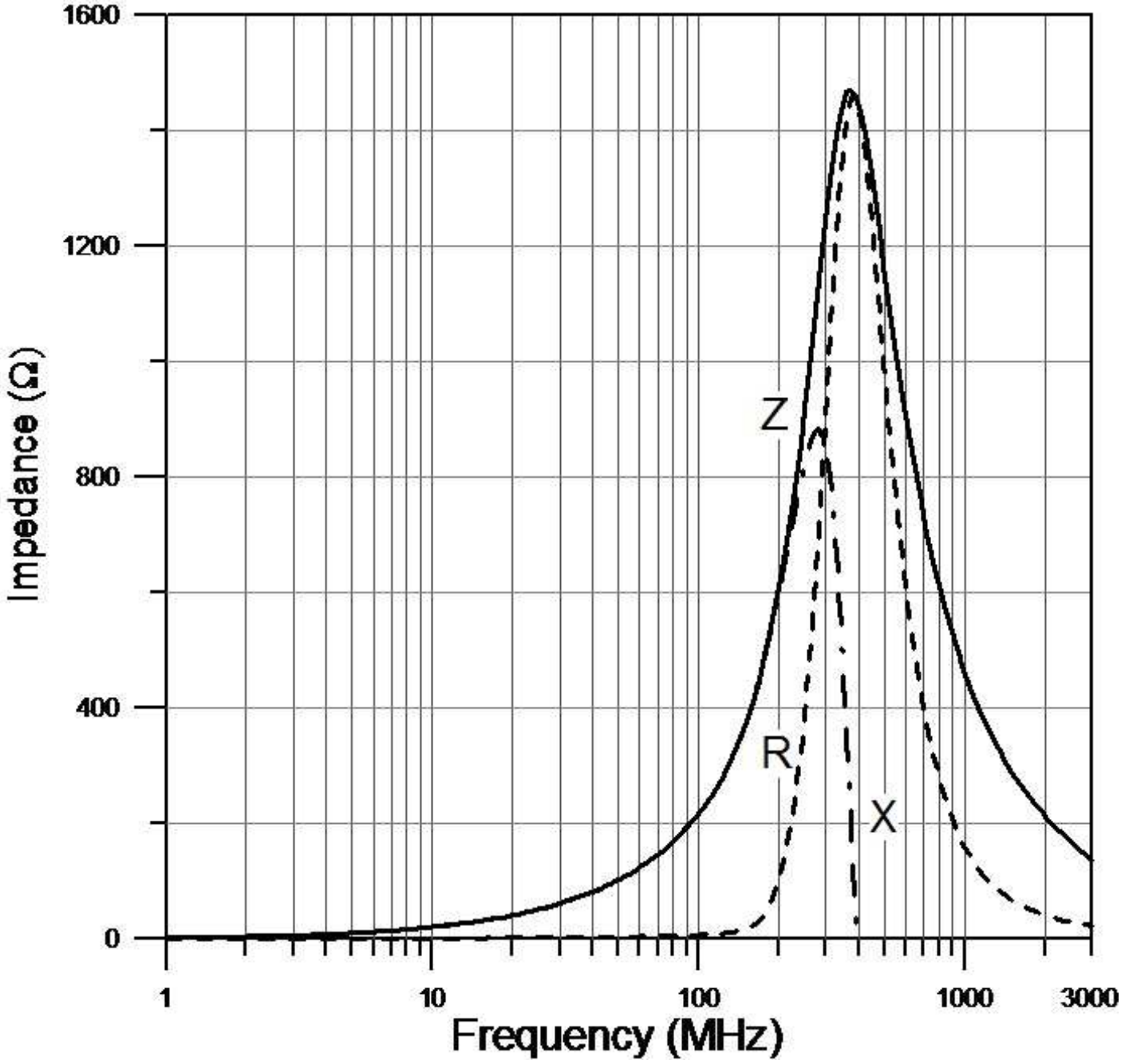

Name	Ferrite Chip EMI Suppressors EBMS-100505	COMPONENT SPECIFICATION		3/8
		SPEC#	EBMS100505H221	

6. Reflow soldering conditions

- Pre－heating should be in such a way that the temperature difference between solder and ferrite surface is limited to 150℃ max. Also cooling into solvent after soldering should be in such a way that the temperature difference is limited to 100℃ max.
  Insufficient pre－heating may cause cracks on the ferrite, resulting in the deterioration of product quality.
- Products should be soldered within the following allowable range indicated by the slanted line.
  The excessive soldering conditions may cause the corrosion of the electrode, when soldering is repeated, allowable time is the accumulated time.

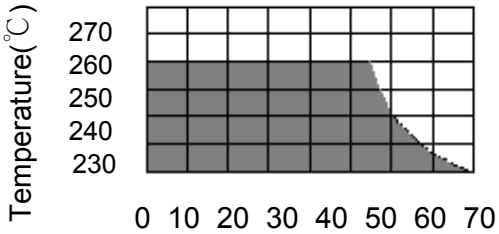

Temperature Profile

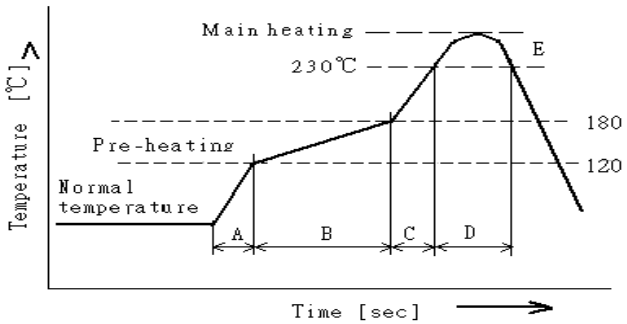

(Melting area of solder)

A	Slope of temp. rise	1 to 5	℃/sec
B	Heat time	50 to 150	sec
	Heat temperature	120 to 180	℃
C	Slope of temp. rise	1 to 5	℃/sec
D	Time over 230℃	90~120	sec
E	Peak temperature	255~260	℃
	Peak hold time	10 max.	sec
No. of mounting		3	times

6-1 Reworking with soldering iron

Preheating	150℃, 1 minute
Tip temperature	280℃ max.
Soldering time	3 seconds max.
Soldering iron output	30w max.
End of soldering iron	ϕ3mm max.

- Reworking should be limited to only one time.

Note：Do not directly touch the products with the tip of the soldering iron in order to prevent the crack on the ferrite material due to the thermal shock.

6-2 Solder Volume

Solder shall be used not to be exceed the upper limits as shown below.

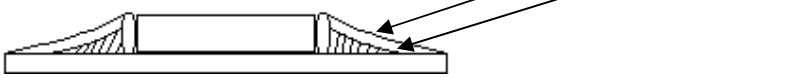

When solder volume is increased, the mechanical stress to product is also increased. Exceeding solder volume may cause the failure of mechanical or electrical performance.

Name	Ferrite Chip EMI Suppressors EBMS-100505	COMPONENT SPECIFICATION		4/8
		SPEC#	EBMS100505H221	

7. Equipment

7-1 IMPEDANCE

Impedance shall be measured with HP－4286A impedance analyzer or equivalent system

7-2 DC RESISTANCE

DC resistance shall be measured using HP 4338 digital mili－ohm meter with 4 terminal method.

8. Mechanical Characteristics

ITEM	Specification	Test Conditions
Terminal Strength	Terminal strength does not distort the case shall meet SPEC DC resistance specifications.	Solder chip on PCB and applied 10N (1.02Kgf) for 10 sec 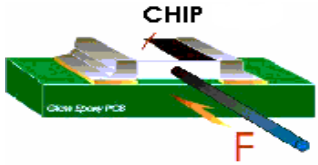
Substrate Bending Test	SPEC substrate bending test DC resistance shall meet specifications.	After soldering a chip to a test substrate, bend the substrate by 3mm hold for 10s and then return. Soldering shall be done in accordance with the recommended PC board pattern and reflow soldering. 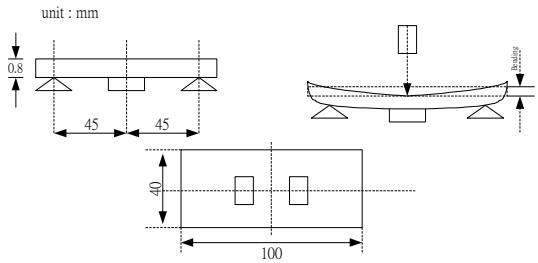
Resistance to Solder Heat	No visible damage Electrical characteristics and mechanical characteristics shall be satisfied. **Consult standard MIL-STD-202 METHOD 210**	Solder Temp. : 265±3℃ Immersion time : 6±1 sec Preheating : 100℃ to 150℃, 1 minute. Measurement to be made after keeping at room temp for 24±2 hrs. Solder : Sn-3Ag-0.5Cu
Solderability	95% min. coverage of all metabolised area **Consult standard J-STD-002**	Solder temp. : 240±5℃ Immersion time : 3±1 sec

Name	Ferrite Chip EMI Suppressors EBMS-100505	COMPONENT SPECIFICATION		5/8
		SPEC#	EBMS100505H221	

9. RELIABILITY AND TEST CONDITIONS

9-1 HIGH TEMPERATURE RESISTANCE

a. Performance specification
1.Appearance：no mechanical damage
2. Impedance shall be with ±30% of the initial value

b.Test condition
1.Temperature: 125℃ ±2℃
2.Testing time：1000±12hrs
3.Measurement：After placing at room ambient temperature for 24 hours minimum

9-2 Biased Humidity RESISTANCE

a.Performance specification
1.Appearance：no mechanical damage
2. Impedance shall be with ±30% of the initial value

b.Test condition
1.Humidity: 85 ± 5%RH
2. Temperature: 85℃ ±2℃
3.Testing time: 1000 ± 12 hours
4.Measurement：After placing at room ambient temperature for 24 hours minimum

9-3 TEMPERATURE CYCLE

a.Performance specification
1.Appearance：no mechanical damage
2. Impedance shall be with ±30% of the initial value

b.Test condition
1. Low Temperature: - 55℃ ±5℃ kept stabilized for 30 minutes each
2. High Temperature: 125℃ ±5℃kept stabilized for 30 minutes each
2.Cycle：1000 cycles
3.Measurement：After placing for 24hours minimum at room ambient temperature
4. step1. -55℃ temp±5℃ 30±3 minutes
step2. Room temperature 2to5 minutes
step3. +125℃ temp±5℃ 30±3 minutes
step4. room temperature 2to5 minutes

9-4 VIBRATION TEST

a.Performance specification
1.Appearance：no mechanical damage
2. Impedance shall be with ±30% of the initial value

b.Test condition
1.Frequency and Amplitude:10-2000-10Hz
2.Direction:X,Y,Z.
3.Test duration:4 hours for each direction,12hours in total.

9-5 Mechanical Shock TEST

a.Performance specification
1.Appearance：no mechanical damage
2. Impedance shall be with ±30% of the initial value

b.Test condition
1.peak acceleration ：100 g's
2.Duration of pulse：6 ms
3.Waveform ：Half-sine
4.Velocity change ：12.3 ft/sec
5. Direction：X，Y，Z（3axes/3 times）

9-6 Operational Life

a. Performance specification
1.Appearance：no mechanical damage
2. Impedance shall be with ±30% of the initial value

b.Test condition
1.Temperature: 125℃ ±2℃
2.Testing time：1000±12hrs
3.Measurement：After placing at room ambient temperature for 24 hours minimum

9-7 Electrostatic discharge test

a. Performance specification
1.Appearance：no mechanical damage
2. Impedance shall be with ±30% of the initial value

b.Test condition
1.ESD voltage: 15k volts
2.Mode 1:150 pF/330 Ohm
3.Mode 2:150 pF/2000 Ohm

9.1 REMARK
Reliability tests can be adjusted according to customers' special requirements.

Name	Ferrite Chip EMI Suppressors EBMS-100505	COMPONENT SPECIFICATION		6/8
		SPEC#	EBMS100505H221	

PAPER CARRIER TYPE PACKING

10-1 DIMENSIONS

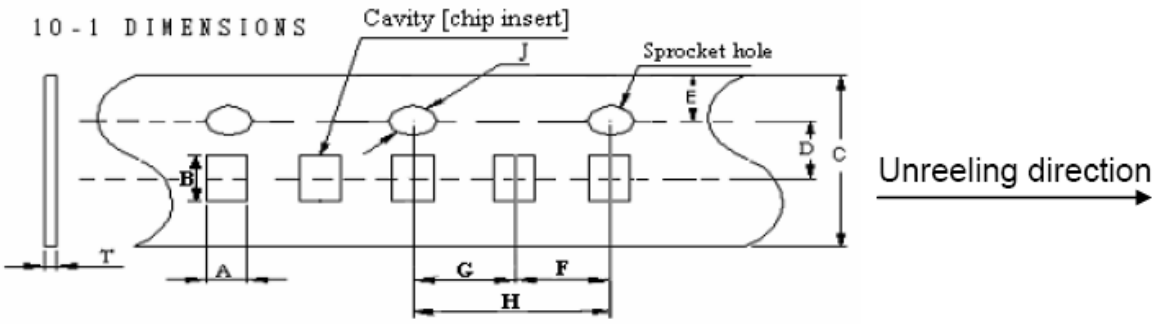

A	B	C	D	E	F	G	H	J	T
0.62 ±0.05	1.12 ±0.05	8.00 ±0.10	3.50 ±0.05	1.75 ±0.10	2.00 ±0.05	2.00 ±0.05	4.00 ±0.10	1.55 ±0.05	0.6 ±0.05

10-2 LEADER AND TRAILER TAPE

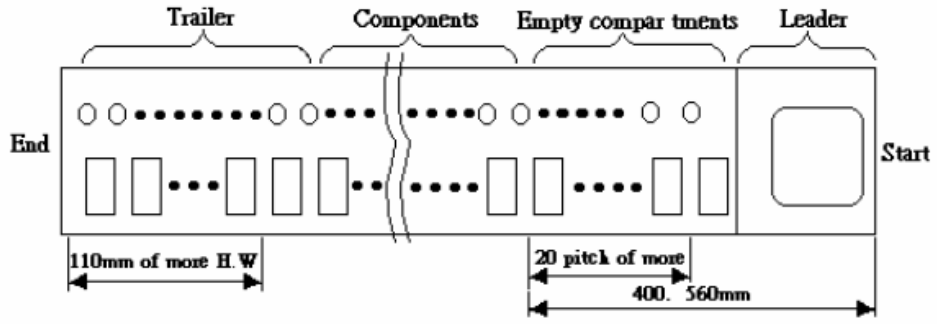

10-3 DIRECTION THE DIRECTION SHALL BE SEEN FROM THE TOP OF COVER TAPE

10-4 REELS

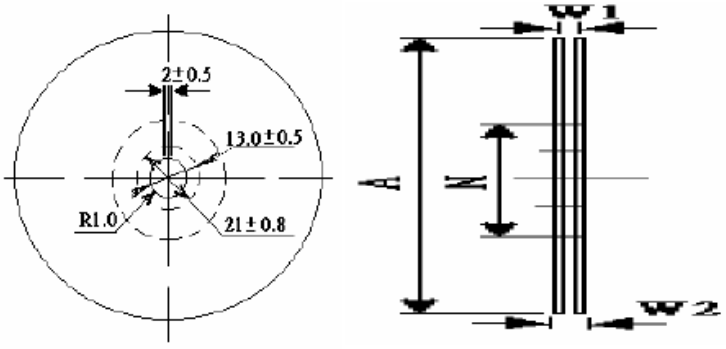

UNIT:mm

A	178 ±2.0
N	50 MIN
W1	10 ±1.5
W2	20 MAX

PACKING QTY.
10,000 PCS REEL

10-5 PEELING STRENGTH OF COVER TAPE

Cover tape	(10g~100g)

165°~180°

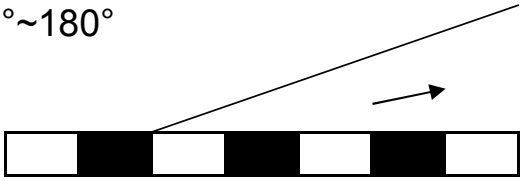

Test condition

1. peel angle：165°~180° vs carrier tape
2. peel speed：300mm/min

11. Packaging

1. Tape & Reel packaging in component specification 6/8
2) Reel and a bag of desiccant shall be packed in Nylon or plastic bag
3) Maximum of 5 reels shall be packaged in a inner box
4) Maximum of 6 inner box shall be packaged in a outer box

12. Reel Label

Producing the goods label needs to indicate (1) Pb Free (2) RoHS Compliant

NAME	Ferrite Chip EMI Suppressors EBMS-100505	COMPONENT SPECIFICATION		8/8
		SPEC#	EBMS100505H221	

13. Storage

13-1The solderability of the external electrode may be deteriorated if packages are stored where they are exposed to high humidity. Packages must be stored at 40℃ or less and 70% RH or less.

13-2 The solderability of the external electrode may be deteriorated if packages are stored where they are exposed to dust or harmful gas (hydrogen chloride, sulfurous acid gas or hydrogen sulfide).

13-3 Packaging material may be deformed if packages are stored where they are exposed to heat or direct sun－light.

13-4 Minimum packages, such as polyvinyl heat－seal packages shall not be opened until just before they are used. If opened, use the reels as soon as possible.

13-5 Solderability specified in component specification 4/8 shall be for 12 months from the date of delivery on condition that they are stored at the environment specified clause 13-1 & 13-2.
For those parts which passed more than 12 months shall be checked solderability before it is used.

14. Quality System

- ISO/IATF16949
- IECQ QC 080000