SCHEMATIC

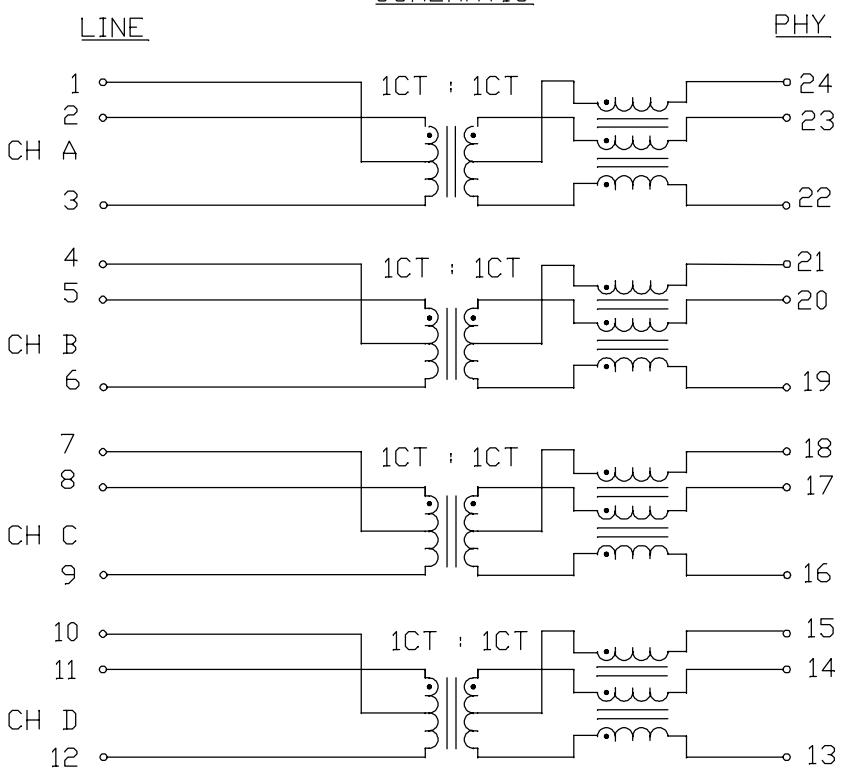

ELECTRICAL SPECIFICATION @25°C

RoHS

TURNS RATIO	
(2-1-3) : (23-24-22)	1CT : 1CT
(5-4-6) : (20-21-19)	1CT : 1CT
(8-7-9) : (17-18-16)	1CT : 1CT
(11-10-12) : (14-15-13)	1CT : 1CT
POLARITY	PER DOT CONVENTION
OCL	
@100kHz, 100mV, 19mA DC BIAS	120uH MIN
@100kHz, 100mV	180uH MIN
HIPOT	LEAKAGE CURRENT LESS THAN 1mA AT 2250VDC

INSERTION LOSS

FREQ(MHz)	1	2-300	400	500
MAX (dB)	0.3	1.0	1.5	2.0

RETURN LOSS (100 OHM LINESIDE LOAD)

FREQ(MHz)	1	2-100	200	500	600
MIN (dB)	18	20	15	12	9

COMM. TO DIFF. MODE REJECTION

FREQ(MHz)	50	100	200	300	400	500
MAX (dB)	48	42	36	33	30	28

DIFF. TO COMM. MODE REJECTION

FREQ(MHz)	50	100	200	300	400	500
MAX (dB)	30	27	24	22	21	20

BALANCED DC LINE CURRENT: 600mA NOMINAL CONTINUOUS
720mA MAXIMUM CONTINUOUS
1.2A MAXIMUM FOR 200mS

DESIGNED FOR EXTENDED TEMPERATURE 10G 60W POE APPLICATIONS

* INTERNAL USE ONLY

ORIGINATED BY: ZJ CHEN	DATE: 2023-12-01	TITLE: ELECTRICAL SPECIFICATION	PART NO. / DRAWING NO.: S558-10GB-22	STANDARD DIM. TOL. IN INCH: .X, .XX, .XXX	[ ] METRIC DIM. AS REF.
DRAWN BY: JL WU	DATE: 2023-12-01		FILE NAME: S55810GB22C.DWG		UNIT : INCH [mm]
					SCALE : N/A
					SIZE : A4

REV. : C | PAGE : 2

POWER | PROTECT | CONNECT

RoHS

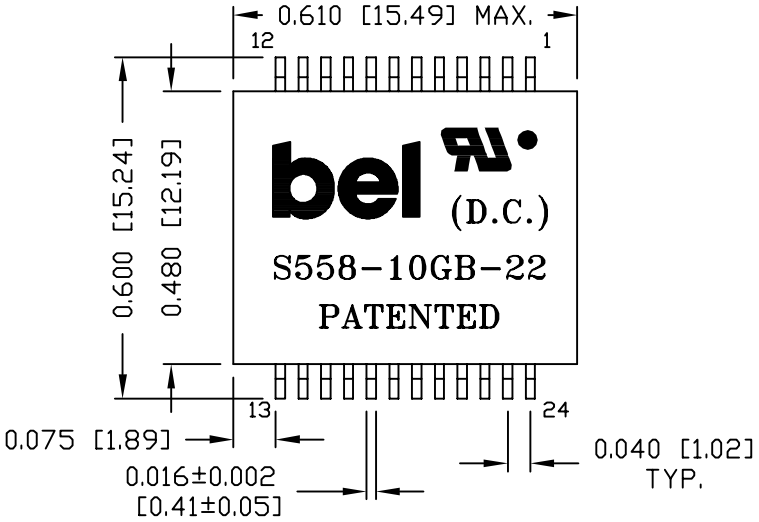

SUGGESTED PCB PAD LAYOUT

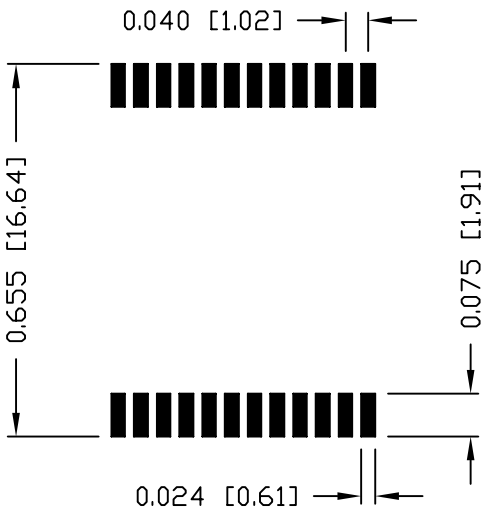

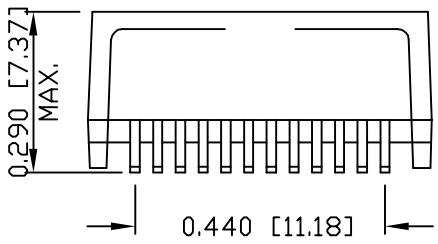

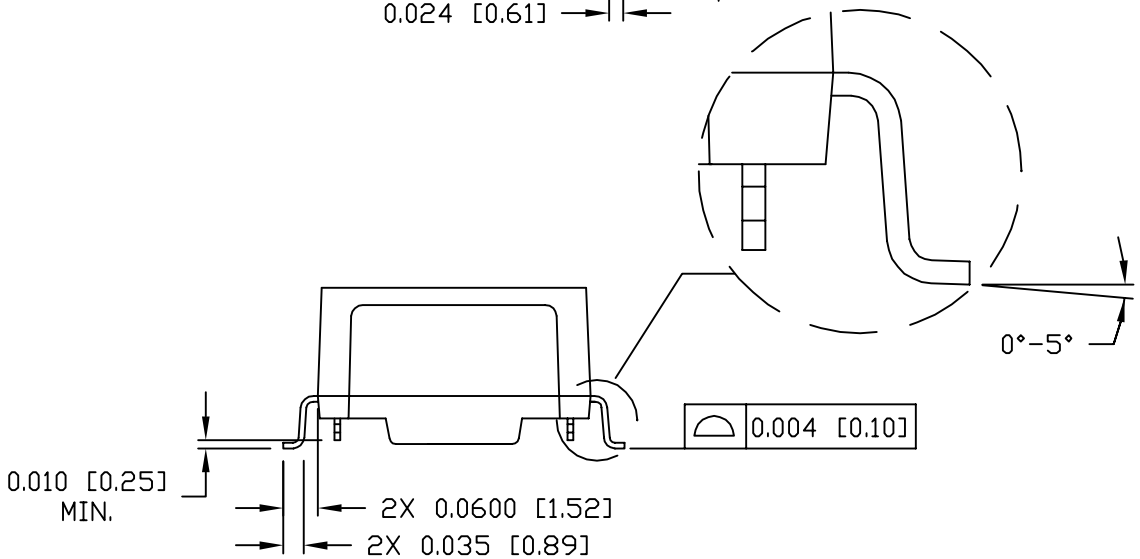

NOTES:

1. STANDARD MARKING REFER TO DOC. HAND-WORK-04.
2. PACKAGE CODE: "QABS001".

ORIGINATED BY: Lawrence Tsang	DATE: 2020-05-15	TITLE: MECHANICAL SPECIFICATION	PART NO. / DRAWING NO.: S558-10GB-22	STANDARD DIM. TOL. IN INCH: .X / .XX ±0.01 / .XXX ±0.005	[ ] METRIC DIM. AS REF.	REV. : A / PAGE : 3
DRAWN BY: ZC Guo	DATE: 2020-05-15		FILE NAME: S55810GB22A.DWG		UNIT : INCH [mm] / SCALE : N/A / SIZE : A4	bel POWER | PROTECT | CONNECT