Product Specifications

Electrical Specifications

Voltage Rating:
1000VAC (200mA-2A)
1000VDC (200mA-2A)
600VAC (2.5A-10A)
500VAC (12A-25A)

Standards

200mA-2A (1000VAC/DC)
Tested to UL 248-14 Standard. File E197390
Tested to CSA C22.2 No.248.14 Standard. File E197390

Interrupting Rating

50kA @ 1000VAC/DC (200mA-2A) (In Practice)
Time Constant ≤ 1ms (1000VDC)
10kA @1000VAC (200mA-2A)
10kA @600VAC (200mA-10A)
10kA @ 1000VDC (200mA-2A)
Time Constant ≤ 1ms

Material Specifications

Body Material: Ceramic

Mechanical Dimensions: Inches [mm]

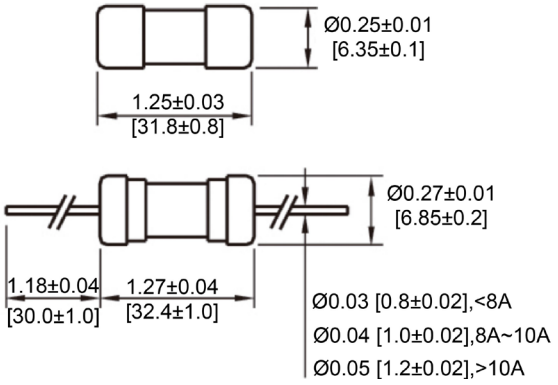

Part Numbers Information

Cartridge P/N	Axial Lead P/N	Ampere Rating	I^2T Reference (A^2 Sec)
SCA-200mA	SCA-P-200mA	200mA	0.00573
SCA-250mA	SCA-P-250mA	250mA	0.00926
SCA-300mA	SCA-P-300mA	300mA	0.0152
SCA-315mA	SCA-P-315mA	315mA	0.0168
SCA-350mA	SCA-P-350mA	350mA	0.0208
SCA-375mA	SCA-P-375mA	375mA	0.0241
SCA-400mA	SCA-P-400mA	400mA	0.0203
SCA-500mA	SCA-P-500mA	500mA	0.0342
SCA-600mA	SCA-P-600mA	600mA	0.0386
SCA-630mA	SCA-P-630mA	630mA	0.0406
SCA-700mA	SCA-P-700mA	700mA	0.0532
SCA-750mA	SCA-P-750mA	750mA	0.0763
SCA-800mA	SCA-P-800mA	800mA	0.0925
SCA-1A	SCA-P-1A	1A	0.142
SCA-1.25A	SCA-P-1.25A	1.25A	0.218
SCA-1.5A	SCA-P-1.5A	1.5A	0.328
SCA-1.6A	SCA-P-1.6A	1.6A	0.411
SCA-2A	SCA-P-2A	2A	0.738
SCA-2.5A	SCA-P-2.5A	2.5A	1.271
SCA-3A	SCA-P-3A	3A	1.95
SCA-3.15A	SCA-P-3.15A	3.15A	2.188
SCA-3.5A	SCA-P-3.5A	3.5A	2.728
SCA-4A	SCA-P-4A	4A	3.631
SCA-5A	SCA-P-5A	5A	6.457
SCA-6A	SCA-P-6A	6A	9.247
SCA-6.3A	SCA-P-6.3A	6.3A	10.24
SCA-7A	SCA-P-7A	7A	11.48
SCA-8A	SCA-P-8A	8A	16.44
SCA-10A	SCA-P-10A	10A	24.1
SCA-12A	SCA-P-12A	12A	33.85
SCA-12.5A	SCA-P-12.5A	12.5A	38.63
SCA-15A	SCA-P-15A	15A	55.28
SCA-16A	SCA-P-16A	16A	63.53
SCA-20A	SCA-P-20A	20A	76.21
SCA-25A	SCA-P-25A	25A	121.3

Time vs Percent of Rated Current

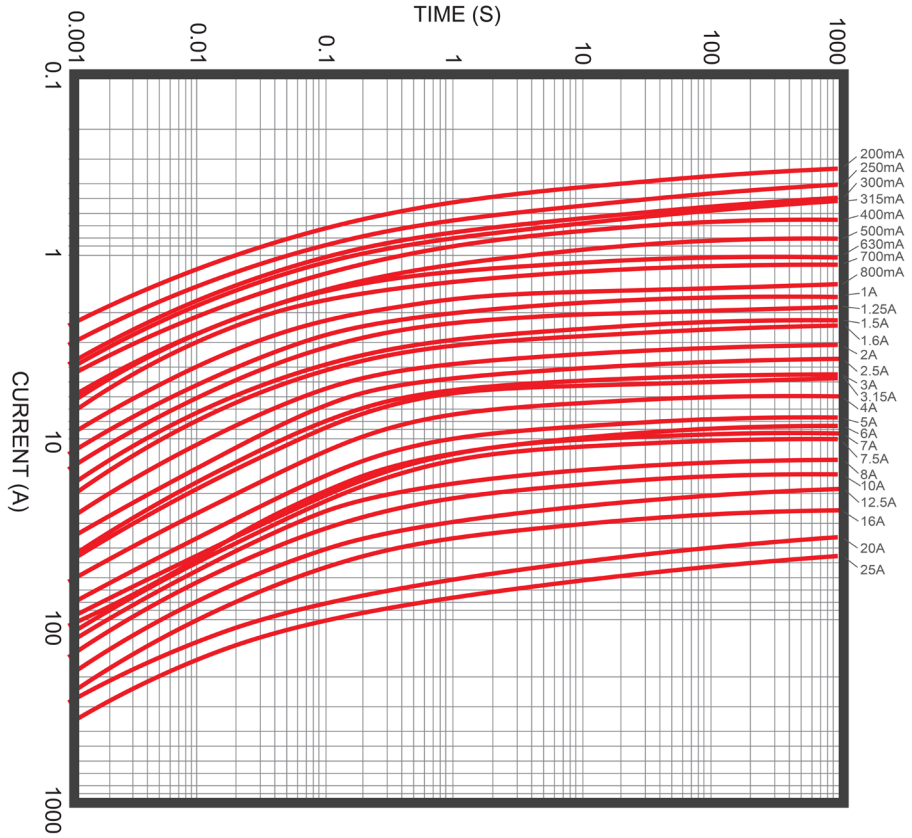

% of Rated Current	Current Rating	Min Hold Time	Max Hold Time
210%	<1A	-	-
275%		-	-
400%		-	60ms
1000%		-	6ms
210%	1A-10A	-	30 mins
275%		5ms	1s
400%		-	60ms
1000%		-	6ms
210%	10.1A-16A	-	30 mins
275%		10ms	2s
400%		-	100ms
1000%		-	10ms
210%	16.1A-25A	-	30 mins
275%		10ms	5s
400%		-	200ms
1000%		-	10ms

Blister Pack: Inches [mm]

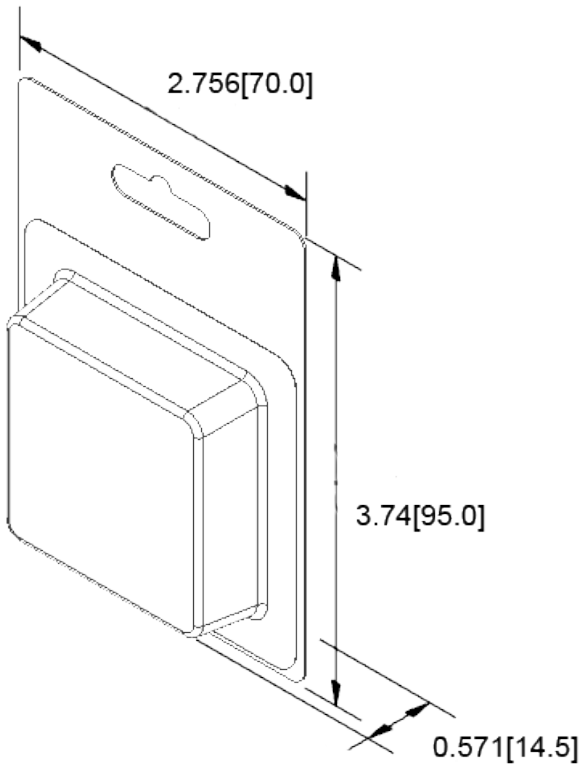

Pill Box: Inches [mm]

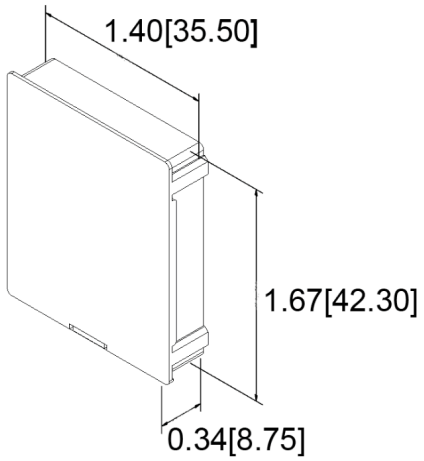

Retail Pack Part Number Information

Ampere Rating	Retail Pack # Blister Card (5PCS)	Retail Pack # Pill Box (5PCS)
1A	SCA-1A-BP	SCA-1A-BX
2.5A	SCA-2.5A-BP	SCA-2.5A-BX
3A	SCA-3A-BP	SCA-3A-BX
3.15A	SCA-3.15A-BP	SCA-3.15A-BX
3.5A	SCA-3.5A-BP	SCA-3.5A-BX
4A	SCA-4A-BP	SCA-4A-BX
5A	SCA-5A-BP	SCA-5A-BX
6A	SCA-6A-BP	SCA-6A-BX
6.3A	SCA-6.3A-BP	SCA-6.3A-BX
7A	SCA-7A-BP	SCA-7A-BX
10A	SCA-10A-BP	SCA-10A-BX
12A	SCA-12A-BP	SCA-12A-BX
20A	SCA-20A-BP	SCA-20A-BX
25A	SCA-25A-BP	SCA-25A-BX

* Retail packs are for cartridge style fuses only

Rev	Date of issue	Revision Notes	Designed	Approved
E	03-06-2024	Initial Drawing	RC	OF