Automotive Fault Protected High-Speed CAN FD Transceiver with Silent Mode

Features

- Meets the ISO 11898-2:2016 and SAE J2284-1 to SAE J2284-5 Physical Layer Standards
- Supports CAN FD and Data Rating up to 5 Mbps
- Short Propagation Delay Times and Fast Loop Times
- 5-V Power Supply, I/O Voltage Range Supports 2.8-V to 5.5-V MCU Interface
- Ideal Passive Behavior to CAN Bus when Unpowered
- Common-Mode Input Voltage: ±30 V
- Protection Feature:
  - IEC 61000-4-2 ESD Protection up to ±15 kV
  - Bus Fault Protection: ±70 V
  - VCC and VIO (V variants only) Under-voltage Protection
  - TXD Dominant Time-out Function and Bus-Dominant Time-out Function
  - Thermal Shutdown Protection
- Available in SOP8 Package and Leadless DFN3X3 Package
- AEC-Q100 Qualified for Automotive Applications，Grade 1

Applications

- All Devices Supporting Highly Loaded CAN Networks
- Automotive and Transportation
  - Body Electronics / Lighting
  - Power Train / Chassis
  - Infotainment / Cluster
  - ADAS / Safety

Description

The TPT1051 is a CAN transceiver that meets the ISO11898 high-speed CAN (Controller Area Network) physical layer standard. The device is designed to be used in CAN FD networks up to 5 Mbps, with enhanced timing margin and higher data rates in long and highly loaded networks. As designed, the device features crosswire, overvoltage, and loss of ground protection from −70 V to +70 V, over-temperature shutdown, with a −30 V to +30 V common-mode input voltage range. The TPT1051V has a secondary power supply input for I/O level shifting the input pin thresholds and RXD output level. This family has a silent mode which is also commonly referred to as the listen-only mode. Additionally, all devices include many protection features to enhance the device and network robustness.

The TPT1051 and TPT1051V are available in SOP8 and DFN3X3-8L packages and are characterized from −40°C to +125°C.

Typical Application Circuit

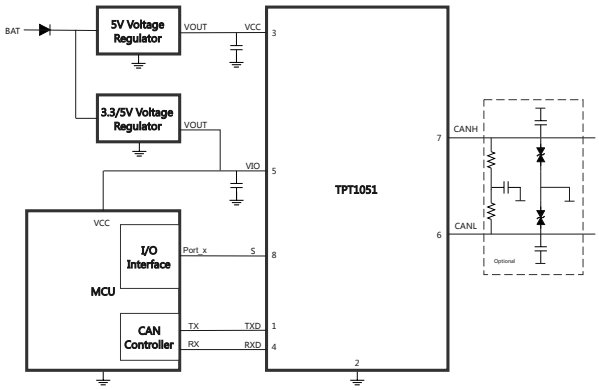

Table of Contents

Features 1
Applications 1
Description 1
Typical Application Circuit 1
Product Family Table 3
Revision History 3
Pin Configuration and Functions 4
Specifications 6
Absolute Maximum Ratings 6
ESD(Electrostatic Discharge Protection) 6
Recommended Operating Conditions 7
Thermal Information 7
Electrical Characteristics 8
AC Timing Requirements 12
Parameter Measurement Information 14
Test Circuit 14
Parameter Diagram 15
Detailed Description 16
Overview 16
Functional Block Diagram 16
Feature Description 17
Application and Implementation 19
Application Information 19
Typical Application 19
Tape and Reel Information 20
Package Outline Dimensions 21
DFN3X3-8 21
SOP-8 22
Order Information 23
IMPORTANT NOTICE AND DISCLAIMER 24

Product Family Table

Order Number	VCC (V)	VIO (V)	BUS Protection (V)	Package
TPT1051VQ-SO1R-S	4.5 to 5.5	2.8 to 5.5	±70	SOP8
TPT1051VQ-DF6R-S	4.5 to 5.5	2.8 to 5.5	±70	DFN3X3-8L
TPT1051Q-SO1R-S	4.5 to 5.5	2.8 to 5.5	±70	SOP8
TPT1051Q-DF6R-S	4.5 to 5.5	2.8 to 5.5	±70	DFN3X3-8L

Revision History

Date	Revision	Notes
2022-12-21	Rev.A.0	Released Version
2023-11-13	Rev.A.1	Corrected POD typo

Pin Configuration and Functions

TPT1051VQ
SOP8 Package
Top View

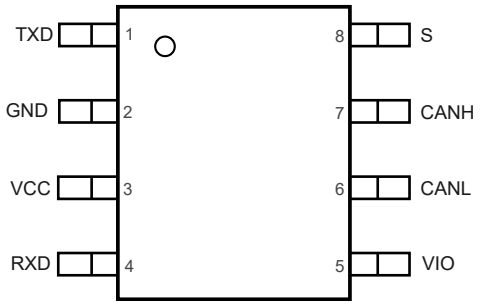

TPT1051VQ
DFN3X3-8 Package
Top View

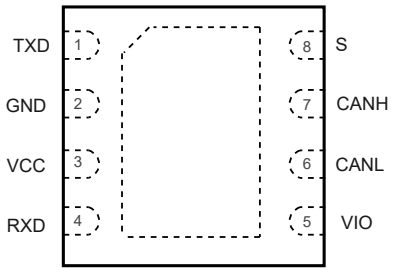

Table 1. Pin Functions: TPT1051VQ

Pin		I/O	Description
No.	Name		
1	TXD	I	CAN transmit data input (LOW for dominant and HIGH for recessive bus states)
2	GND	GND	Ground
3	VCC	POWER	Transceiver 5 V supply voltage
4	RXD	O	CAN receive data output (LOW for dominant and HIGH for recessive bus states)
5	VIO	POWER	Transceiver I/O level shifting supply voltage
6	CANL	BUS I/O	Low level CAN bus input/output line
7	CANH	BUS I/O	High level CAN bus Input/output line
8	S	I	Silent (listen-only) mode , Mode control (Active High)

TPT1051Q
SOP8 Package
Top View

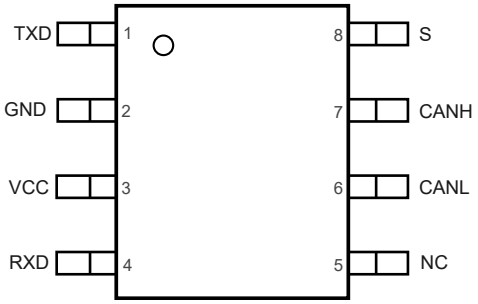

TPT1051Q
DFN3X3-8 Package
Top View

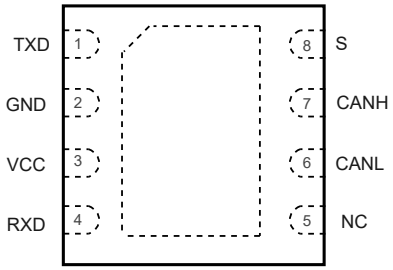

Table 2. Pin Functions: TPT1051Q

Pin		I/O	Description
No.	Name		
1	TXD	I	CAN transmit data input (Low for dominant and High for recessive bus states)
2	GND	GND	Ground
3	VCC	Power	Transceiver 5 V supply voltage
4	RXD	O	CAN receive data output (Low for dominant and High for recessive bus states)
5	NC	–	Not Connected
6	CANL	Bus I/O	Low-level CAN bus input/output line
7	CANH	Bus I/O	High-level CAN bus input/output line
8	S	I	Silent (listen-only) mode , Mode control (Active High)

Specifications

Absolute Maximum Ratings

Parameter		Min	Max	Unit
V_{CC}	5-V Bus Supply Voltage Range	−0.3	7	V
V_{IO}	I/O Level-Shifting Voltage Range	−0.3	7	V
V_{BUS}	Can Bus I/O Voltage Range (CANH, CANL)	−70	70	V
V_{BUS_DIFF}	Differential Voltage of Can Bus, CANH - CANL	−70	70	V
V_{LOGIC}	Logic Input And Output Terminal Voltage Range (TXD, STB, RXD)	−0.3	7	V
I_{O_RXD}	Rxd (Receiver) Output Current	−8	8	mA
T_J	Maximum Junction Temperature	−40	150	°C
T_{STG}	Storage Temperature Range	−65	150	°C
T_{OTP}	Shutdown Junction Temperature		170	°C

(1) Stresses beyond those listed under Absolute Maximum Ratings may cause permanent damage to the device. Exposure to any Absolute Maximum Rating condition for extended periods may affect device reliability and lifetime.
(2) This data was taken with the JEDEC low effective thermal conductivity test board.
(3) This data was taken with the JEDEC standard multilayer test boards.

ESD(Electrostatic Discharge Protection)

Parameter		Condition	Minimum Level	Unit
IEC	IEC Contact Discharge	IEC-61000-4-2, Bus Pin	±15	kV
	IEC Air-Gap Discharge	IEC-61000-4-2, Bus Pin	±15	kV
HBM	Human Body Model ESD	ANSI/ESDA/JEDEC JS-001, CAN Bus Pin	±8	kV
		ANSI/ESDA/JEDEC JS-001, All Pin	±8	kV
CDM	Charged Device Model ESD	ANSI/ESDA/JEDEC JS-002, All Pin	±1.5	kV
LU	Latch up	Latch up per JESD78, All Pin (3)	±500	mA
V_{TRAN}	ISO7637-2 transients per IEC 62228-3, CANH, CANL	Pulse 1	-100	V
		Pulse 2a	75	V
		Pulse 3a	-150	V
		Pulse 3b	100	V

(1) JEDEC document JEP155 states that 500-V HBM allows safe manufacturing with a standard ESD control process.
(2) JEDEC document JEP157 states that 250-V CDM allows safe manufacturing with a standard ESD control process.
(3) The test is at the temperature of 25℃.

Recommended Operating Conditions

	Parameter	Min	Max	Unit
V_{IO}	Input/output Voltage	2.8	5.5	V
V_{CC}	Power Supply	4.5	5.5	V
$I_{OH(RXD)}$	RXD Terminal High-Level Output Current	−2		mA
$I_{OL(RXD)}$	RXD Terminal Low-Level Output Current		2	mA
T_A	Operating Ambient Temperature	−40	125	°C

Thermal Information

Package Type	θ_{JA}	θ_{JC}	Unit
SOP8	118	48	°C/W
DFN3x3-8	51	23	°C/W

Electrical Characteristics

All test conditions: V_{CC} = 4.5 V to 5.5 V, R_L= 60 Ω, T = −40°C to 125°C, unless otherwise noted.

Parameter		Conditions	Min	Typ	Max	Unit
Pin V_{CC}, (Power supply)						
V_{CC}	Supply Voltage		4.5	-	5.5	V
V_{UV_VCC}	Rising Undervoltage Detection on V_{cc} for Protected Mode		-	4.1	4.5	V
	Falling Undervoltage Detection on V_{cc} for Protected Mode		3.6	3.9	-	V
V_{HYS_UVVCC}	Hysteresis Voltage on UV_{VCC} (1)		-	200	-	mV
I_{CC}	Silent Mode Supply Current	1051V, device with the "V" suffix, Silent Mode, V_{TXD} = V_{CC}, RL = 60 Ω, C_L = open, V_S = V_{CC}	0.5	1.0	2.5	mA
		1051, device without the "V" suffix, Silent Mode, V_{TXD} = V_{IO}, RL = 60 Ω, C_L = open, V_S = V_{IO}	0.5	1.0	2.5	mA
	Normal Mode Supply Current	Recessive, V_{TXD} = V_{CC}, R_L = 50 Ω, C_L = open, V_S = 0 V	0.5	1.0	2.5	mA
		Dominant, V_{TXD} = 0 V, R_L = 60 Ω, C_L = open, V_S = 0 V	20	50	80	mA
		Dominant bus fault, short circuit on bus lines, V_{TXD} = V_S = 0 V, −3 V < (V_{CANH} = V_{CANL}) < +18V, R_L = C_L = open	2	60	110	mA
PIN V_{IO}, (I/O Level Adapter Supply) (2)						
V_{IO}	Supply Voltage on V_{IO} Pin		2.8	-	5.5	V
V_{UV_VIO}	Rising Undervoltage Detection on V_{IO} For Protected Mode		-	2	2.7	V
	Falling Undervoltage Detection on V_{IO} For Protected Mode		1.3	1.9	-	V
V_{HYS_UVVIO}	Hysteresis Voltage on UV_{VIO} for Protected Mode		-	100	-	mV
I_{IO}	Silent Mode Supply Current on Pin V_{IO}	Silent Mode, RXD Floating, V_{TXD} = V_S = V_{IO}	-	10	16	μA
	Normal Mode Supply Current on Pin V_{IO}	Recessive, V_S = 0 V, V_{TXD} = V_{IO}	-	15	30	μA
		Dominant, V_S = 0 V,	-	200	600	μA

Parameter			Conditions	Min	Typ	Max	Unit
			V_{TXD} = 0 V				
Pin S, (Silent Mode Control Input)							
V_{IH}	High-Level Input Voltage			0.7 x V_{IO}	-	V_{IO}+ 0.3	V
V_{IL}	Low-Level Input Voltage			−0.3	-	0.3 x V_{IO}	V
I_{IH}	High-Level Input Current		V_S = V_{CC} = V_{IO} = 5.5 V	8	11.8	15	μA
I_{IL}	Low-Level Input Current		V_S = 0 V, V_{CC} = V_{IO} = 5.5 V	−1	0	1	μA
I_{LKG_OFF}	Unpowered Leakage Current		V_S = 5.5 V, V_{CC} = V_{IO} = 0 V	−1	0	1	μA
Pin TXD, (CAN Transmit Data Input)							
V_{IH}	High-Level Input Voltage			0.7 x V_{IO}	-	V_{IO}+ 0.3	V
V_{IL}	Low-Level Input Voltage			−0.3	-	0.3 x V_{IO}	V
I_{IH}	High-Level Input Current		V_{TXD} = V_{CC} = V_{IO} =5.5 V	−2	0	2	μA
I_{IL}	Low-Level Input Current		V_{TXD} =0 V, V_{CC} = V_{IO} = 5.5 V	−250	−160	−30	μA
I_{LKG_OFF}	Unpowered Leakage Current		V_{TXD} = 5.5 V, V_{CC} = V_{IO}= 5.5 V	−1	0	1	μA
C_I	Input Capacitance (1)			-	5	-	pF
Pin RXD, (CAN Receive Data Output)							
I_{OH}	High-Level Output Current		VRXD = VIO − 0.4 V	−8	−6	−1	mA
I_{OL}	Low-Level Output Current		V_{RXD} = 0.4 V, bus dominant	2	5	12	mA
I_{LKG_OFF}	Unpowered Leakage Current		V_{RXD} = 5.5 V, V_{CC} = V_{IO} = 0 V	−1	0	1	μA
Pins CANH and CANL, (CAN Bus Lines)							
V_{O_DOM}	Dominant Bus Output Voltage	CANH	V_{TXD} = 0 V, V_S = 0 V, 50 Ω ≤ R_L ≤ 65 Ω, C_L = open, t < $t_{to(dom)TXD}$	2.75	3.5	4.5	V
		CANL		0.5	1.5	2.25	V
V_{SYM_DC}	DC Output Symmetry (dominant or recessive) (V_{CC} – $V_{O(CANH)}$ – $V_{O(CANL)}$)		V_S = 0 V, R_L = 60 Ω, C_L = open,	−0.4	-	0.84	V
V_{SYM}	Transient Symmetry (dominant or recessive) ($V_{O(CANH)}$ + $V_{O(CANL)}$) / V_{CC} (1)		4.75V ≤ V_{CC} ≤ 5.25 V, V_S = 0 V, R_L = 60 Ω, C_{SPLIT} = 4.7 nF, C_L = open, T_{XD} = 250 kHz, 1 MHz	0.9	1.0	1.1	V/V
V_{OD_DOM}	Differential Output Voltage (dominant)		Normal mode, t < $t_{to(dom)TXD}$, V_{TXD} = 0 V, V_S = 0 V, 4.75V ≤ V_{CC} ≤ 5.25 V, 45 Ω ≤ R_L < 50 Ω, C_L = open	1.5	-	3	V

Parameter			Conditions	Min	Typ	Max	Unit
			Normal mode, t < $t_{to(dom)TXD}$, V_{TXD} = 0 V, V_S = 0 V, 4.75V ≤ V_{CC} ≤ 5.25 V, 50 Ω ≤ R_L < 65 Ω, C_L = open	1.5	-	3	V
			Normal mode, t < $t_{to(dom)TXD}$, V_{TXD} = 0 V, V_S = 0 V, 4.75V ≤ V_{CC} ≤ 5.25 V, 65 Ω ≤ R_L ≤ 70 Ω, C_L = open	1.5	-	3.3	V
			Normal mode, t < $t_{to(dom)TXD}$, V_{TXD} = 0 V, V_S = 0 V, 4.75V ≤ V_{CC} ≤ 5.25 V, R_L = 2240 Ω, C_L = open	1.5	-	5	V
V_{OD_REC}	Differential Output Voltage (recessive)		Normal mode, V_{TXD} = V_{CC}, V_S = 0 V, no load	−50	-	50	mV
			Silent mode, V_{TXD} = V_S = V_{CC}, no load	−50	-	50	mV
V_{O_REC}	Recessive Bus Output Voltage		Normal mode, V_{TXD} = V_{IO} = V_{CC}, V_S = 0 V, no load	2	0.5 x VCC	3	V
			Silent mode, V_{TXD} = V_S = V_{IO} = V_{CC}, no load	2	0.5 x VCC	3	V
V_{CM}	Common Mode Range		V_S = 0 or V_{CC}or V_{IO}	−30	-	30	V
$V_{TH_RX_DIF}$	Differential Receiver Threshold Voltage		Normal mode, V_S = 0 V, −30 V ≤ V_{CANH}/ V_{CANL} ≤ 30 V	0.5	0.7	0.9	V
			Silent mode, V_S = V_{IO}, −30 V ≤ V_{CANH}/ V_{CANL} ≤ 30 V	0.5	0.7	0.9	V
V_{REC_RX}	Receiver Recessive Voltage, Normal Mode		−30 V ≤ V_{CANH}/V_{CANL} ≤ 30 V	−4	-	0.5	V
	Receiver Recessive Voltage, Silent Mode			−4	-	0.5	V
V_{DOM_RX}	Receiver Dominant Voltage, Normal Mode		−30 V ≤V_{CANH}/V_{CANL} ≤ 30 V	0.9	-	9	V
	Receiver Dominant Voltage, Silent Mode			0.9	-	9	V
$V_{HYS_RX_DIF}$	Differential Receiver Hysteresis Voltage		Normal mode, −30 V ≤ V_{CANH}/ V_{CANL} ≤ 30 V	50	120	200	mV
			Silent mode, −30 V ≤ V_{CANH}/ V_{CANL} ≤ 30 V	50	120	200	mV
$I_{O_SC_DOM}$	Dominant Short-Circuit Output Current	CANH	V_S = 0 V, V_{CANH} = −15 V to 18 V, CANL = open, V_{TXD} = 0 V	−115	-	-	mA
		CANL	V_S = 0 V, V_{CANL} = −15 V to 18 V, CANH = open, V_{TXD} = 0 V	-	-	115	mA

Parameter		Conditions	Min	Typ	Max	Unit
$I_{O_SC_REC}$	Recessive Short-Circuit Output Current	−27 V ≤ V_{CANH}/ V_{CANL} ≤ 32 V, V_{TXD} = V_{CC}, normal modes	−5	-	5	mA
I_{LKG_IOFF}	Power-off (unpowered) Bus Input Leakage Current	V_{CC} = V_{IO} = 0 V or V_{CC} = V_{IO} shorted to ground via 47kΩ, V_{CANH} = 5 V, V_{CANL} = 5 V	−5	-	5	μA
R_{IN}	Input Resistance (CANH or CANL)	V_{CC} = V_{IO} = 5 V, V_S = 0 V, −30 V ≤ V_{CM} ≤ +30 V	10	23	35	kΩ
R_{IN_M}	Input Resistance Matching: [1 − $R_{IN(CANH)}$ / $R_{IN(CANL)}$] × 100%	V_{CC} = V_{IO} = 5 V, V_S =0 V, V_{CANH} = V_{CANL} =5 V	−2	-	2	%
R_{ID}	Differential Input Resistance	V_{CC} = V_{IO} = 5 V, V_S = 0 V, −30 V ≤ V_{CM} ≤ +30 V	30	47	60	kΩ
C_I	Input Capacitance to Ground (CANH or CANL) (1)		-	-	20	pF
C_{ID}	Differential Input Capacitance (1)		-	-	10	pF

(1) The Typ data is based on bench test and design simulation.
(2) Only device with V suffix (TPT1051V) have a V_{IO} Pin, device without V suffix (TPT1051) V_{IO} connected to V_{CC} internally.

AC Timing Requirements

All test conditions: V_{CC} = 4.5 V to 5.5 V, V_{IO} = 3.0 V to 5.5 V, R_L= 60 Ω, T_A = −40°C to 125°C, unless otherwise noted.

Parameter		Conditions	Min	Typ	Max	Unit
Transceiver Switching Characteristics						
t_{pLD}	Propagation delay time, low TXD to driver dominant (recessive to dominant) (1)	Normal mode, V_S = 0 V, R_L = 60 Ω, C_L = 100 pF	-	60	100	ns
t_{pHR}	Propagation delay time, high TXD to driver recessive (dominant to recessive) (1)		-	60	100	ns
t_{SK_P}	Pulse Skew (|t_{pHR}− t_{pLD}|) (1)		-	10	35	ns
t_R	Differential Output Signal Rise Time (1)		-	45	-	ns
t_F	Differential Output Signal Fall Time (1)		-	45	-	ns
$t_{PROP_TXDL-RXDL}$	Total loop delay, driver input (TXD) low to receiver output (RXD) low, recessive to dominant (1)	Normal mode, V_S = 0 V, R_L = 60 Ω, C_L = 100 pF, $C_{L(RXD)}$ = 15 pF,	-	110	220	ns
$t_{PROP_TXDH-RXDH}$	Total loop delay, driver input (TXD) high to receiver output (RXD) high, dominant to recessive (1)		-	140	220	ns
t_{pRH}	Propagation Delay Time, Bus Recessive Input to RXD High Output (Dominant to Recessive) (1)	V_S = 0 V, $C_{L(RXD)}$ = 15 pF	-	90	120	ns
t_{pDL}	Propagation Delay Time, Bus Dominant Input to RXD Low Output (Recessive to Dominant) (1)		-	90	120	ns
t_{R_R}	RXD Output Signal Rise Time (1)		-	20	-	ns
t_{R_F}	RXD Output Signal Fall Time (1)		-	20	-	ns
FD Timing Parameters						
t_{BIT_BUS}	Bit time on CAN bus output pins with t_{BIT_TXD} = 500 ns (1)	V_S = 0 V, R_L = 60 Ω, C_L = 100 pF, $C_{L(RXD)}$ = 15 pF, Δt_{REC} = t_{BIT_RXD} − t_{BIT_BUS}	435	-	530	ns
	Bit time on CAN bus output pins with t_{BIT_TXD} = 200 ns (1)		155	-	210	ns
t_{BIT_RXD}	Bit time on RXD output pins with t_{BIT_TXD} = 500 ns		400	-	550	ns

Parameter		Conditions	Min	Typ	Max	Unit
	Bit time on RXD output pins with t_{BIT_TXD} = 200 ns		120	-	220	ns
Δt_{REC}	Receiver timing symmetry with t_{BIT_TXD} = 500 ns (1)		−65	-	40	ns
	Receiver timing symmetry with t_{BIT_TXD} = 200 ns (1)		−45	-	15	ns
Device Timing Parameters						
t_{TXD_DTO}	TXD dominant time-out time	normal mode, V_S = 0 V, R_L = 60 Ω, C_L = open, V_{TXD} = 0 V	0.3	2	5	ms

(1) The test data is based on bench test and design simulation.

Parameter Measurement Information

Test Circuit

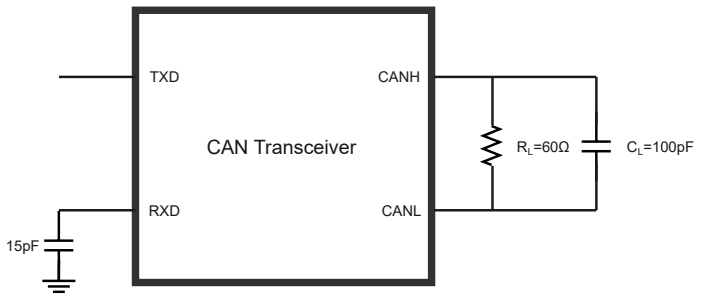

Figure 1. CAN transceiver timing parameter test circuit

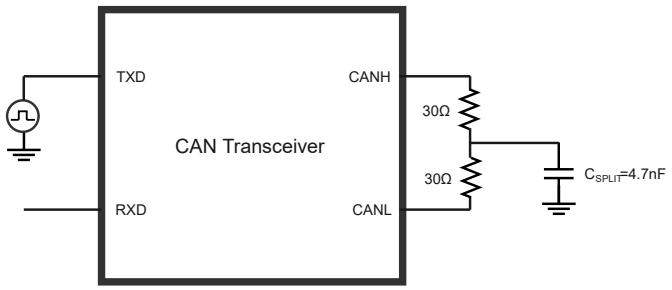

Figure 2. CAN transceiver driver symmetry test circuit

Parameter Diagram

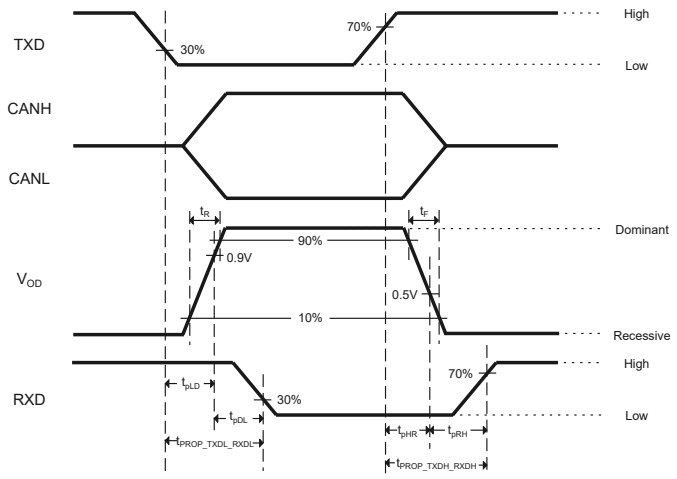

Figure 3. CAN transceiver timing diagram

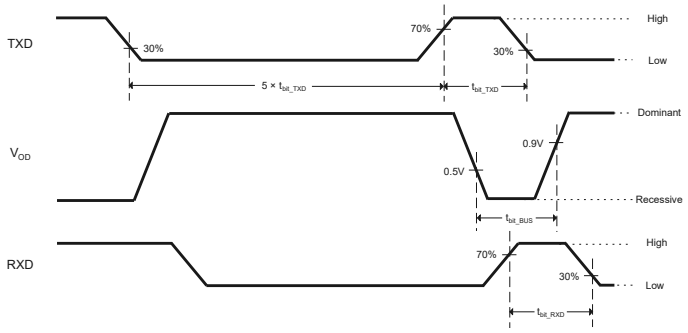

Figure 4. CAN FD timing parameter diagram

Detailed Description

Overview

The TPT1051 is a CAN transceiver that meets the ISO11898 high-speed CAN (Controller Area Network) physical layer standard. The device is designed to be used in CAN FD networks up to 5 Mbps, with enhanced timing margin and higher data rates in long and highly loaded networks. As designed, the device features crosswire, overvoltage, and loss of ground protection from −70 V to +70 V, over-temperature shutdown, with a −30 V to +30 V common-mode input voltage range. The TPT1051 has a secondary power supply input for I/O level shifting the input pin thresholds and RXD output level. This family has a silent mode which is also commonly referred to as the listen-only mode. Additionally, all devices include many protection features to enhance the device and network robustness.

Functional Block Diagram

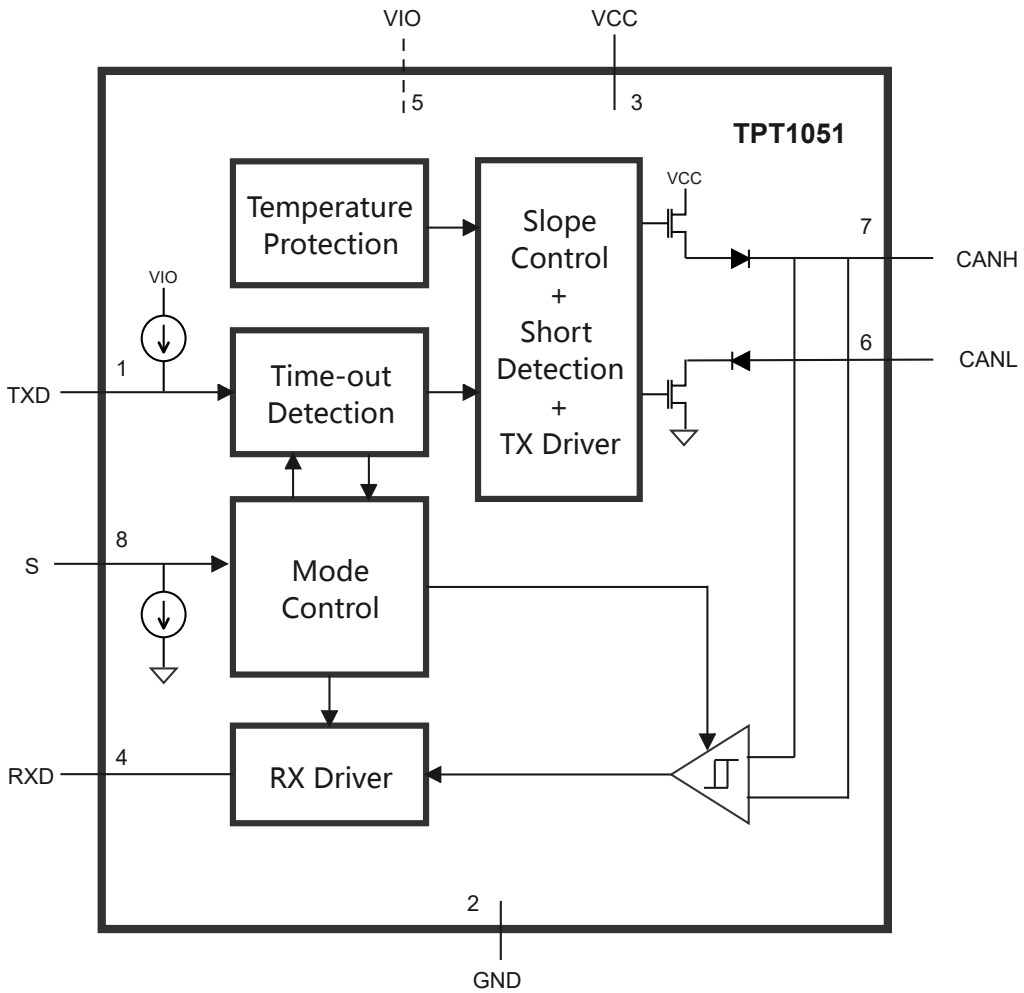

Figure 5. Functional Block Diagram

Feature Description

Table 3. Driver Function Table

Device	Inputs		Outputs		Driven BUS State
	S	TXD	CANH	CANL	
All Devices	L or open	L	H	L	Dominant
		H or Open	Z	Z	Recessive
	H	X	Z	Z	Recessive

Table 4. Receiver Function Table

Device Mode	CAN Differential Inputs $V_{ID} = V_{CANH} - V_{CANL}$	Bus State	RXD Terminal
Normal or Silent	$V_{ID} \geq V_{IT+(MAX)}$	Dominant	L
	$V_{IT-(MIN)} < V_{ID} < V_{IT+(MAX)}$	Indeterminate	Indeterminate
	$V_{ID} \leq V_{IT-(MIN)}$	Recessive	H
	Open ($V_{ID} \approx 0$ V)	Open	H

Normal Mode

A low level on the S pin selects the normal mode. In this mode, the transceiver will transmit and receive data via the bus lines CANH and CANL. The differential receiver converts the analog data on the bus lines into digital data, which is output to the RXD pin. The slopes of the output signals on the bus lines are controlled internally and optimized to guarantee the lowest possibility for Electro Magnetic Emission (EME).

Silent Mode

A high level on the S pin selects the silent mode. In the silent mode, the transmitter is disabled, releasing the bus pins to the recessive state. All other IC functions, including the receiver, continue to operate as in the normal mode, just like the listen-only mode. Silent mode can be used to prevent a faulty CAN controller from disrupting all network communications.

Time-out Function in TXD Dominant Mode

When the TXD pin is set to low, the timer of ‘TXD dominant time-out’ is started. If the low state on TXD persists for longer than t_{TXD_DTO}, the transmitter is disabled and the bus lines are in recessive state. This function prevents a hardware and/or software application failure from driving the bus lines to a permanent dominant state which will block all network communications. The TXD dominant time-out timer is reset as TXD is pulled to high. The TXD dominant time-out time also defines that the data rate should be faster than 10 kbit/s.

Time-out Function in Bus Dominant Mode

In the silent mode, the timer of 'bus dominant time-out' is started when the CAN bus changes from recessive to dominant state. If the dominant state on the bus persists for longer than the t_{BUS_DTO}bus, the RXD pin is reset to high. If a bus short-circuits or a failure in one of the other nodes on the network, this function prevents a clamped dominant bus from

generating a permanent wake-up request. The bus dominant time-out timer is reset when the CAN bus changes from a dominant to recessive state.

Over-Temperature Protection (OTP)

The output drivers are protected against over-temperature conditions. If the virtual junction temperature exceeds the shutdown junction temperature T_{OTP}, the output drivers will be disabled until the virtual junction temperature falls below T_{OTP} and TXD becomes recessive again. Including the TXD condition to ensures output driver oscillation due to temperature drift is avoided.

Application and Implementation

> Note
>
> Information in the following application sections is not part of the 3PEAK's component specification and 3PEAK does not warrant its accuracy or completeness. 3PEAK's customers are responsible for determining suitability of components for their purposes. Customers should validate and test their design implementation to confirm system functionality.

Application Information

The TPT1051 is a CAN transceiver to support CAN FD function up to 5 Mbps, with BUS protection voltage from –70 V to +70 V, overtemperature shutdown, a −30 V to +30 V common-mode range. The VIO of TPT1051 can support the voltage level of TXD and RXD from 2.8 V to 5.5 V. The following sections show a typical application of the TPT1051.

Typical Application

Figure 6 shows the typical application schematic of the TPT1051.

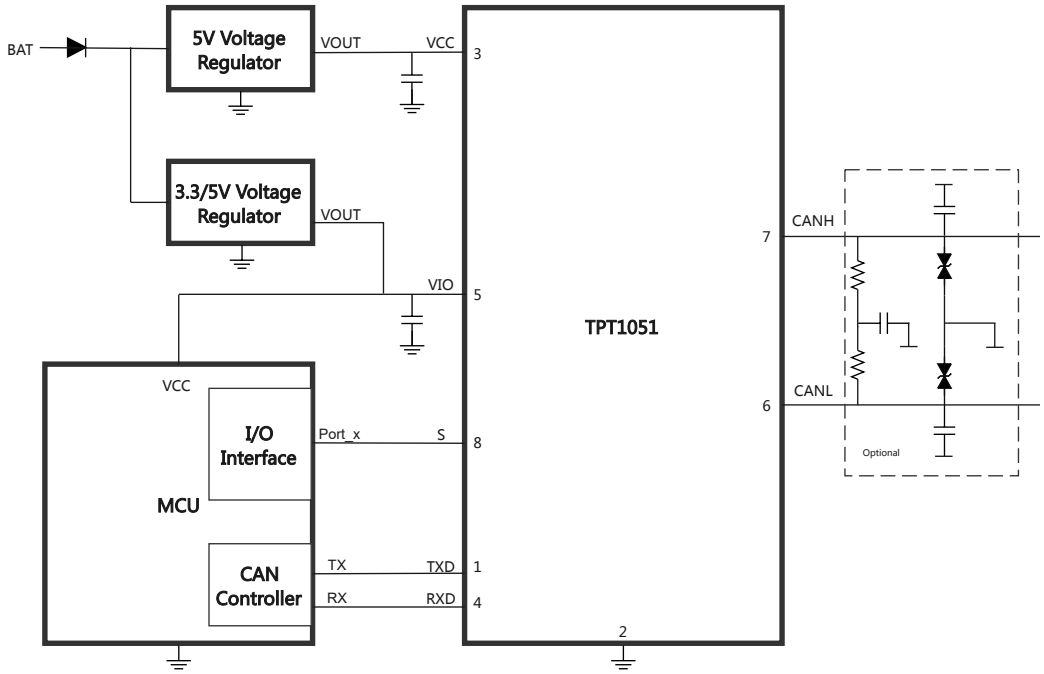

Figure 6. Typical Application Circuit

Tape and Reel Information

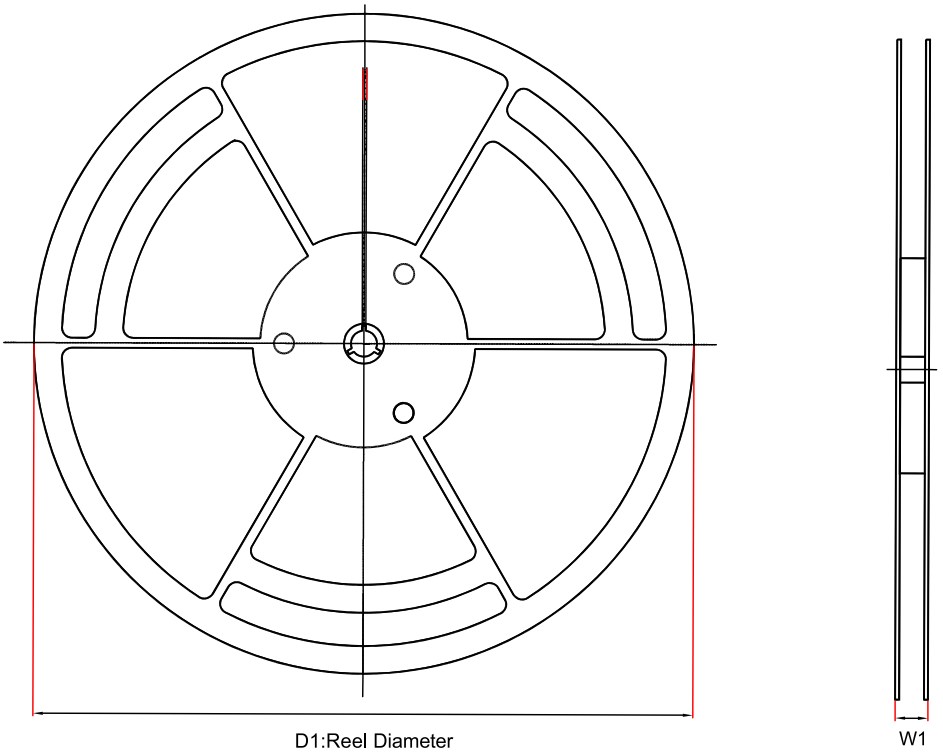

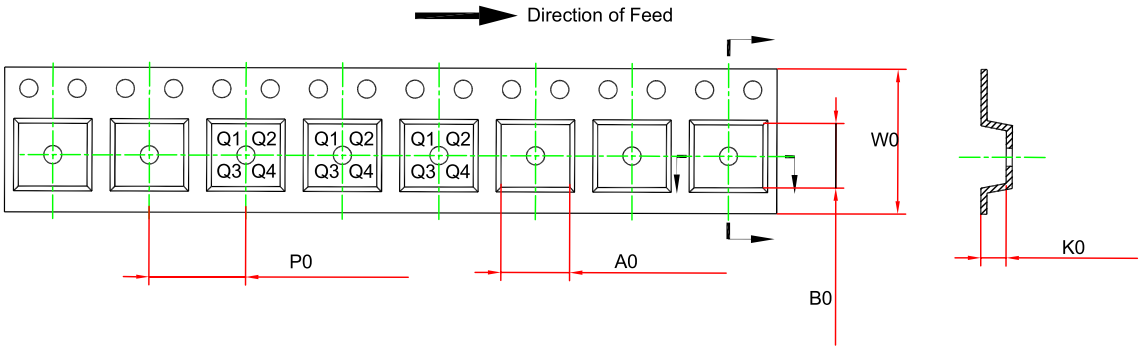

Order Number	Package	D1 (mm)	W1 (mm)	A0 (mm)	B0 (mm)	K0 (mm)	P0 (mm)	W0 (mm)	Pin1 Quadrant
TPT1051VQ-SO1R-S	SOP8	330	17.6	6.5	5.4	2.0	8.0	12.0	Q1
TPT1051VQ-DF6R-S	DFN3x3-8	330	17.6	3.3	3.3	1.1	8.0	12.0	Q1
TPT1051Q-SO1R-S	SOP8	330	17.6	6.5	5.4	2.0	8.0	12.0	Q1
TPT1051Q-DF6R-S	DFN3x3-8	330	17.6	3.3	3.3	1.1	8.0	12.0	Q1

Package Outline Dimensions

DFN3X3-8

Package Outline Dimensions DFC(DFN3X3-8-WET-H)

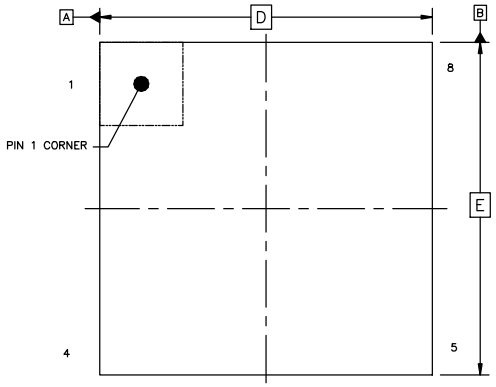

TOP VIEW

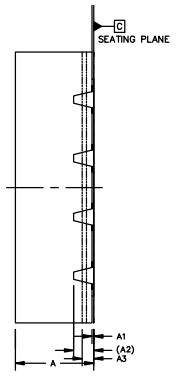

SIDE VIEW

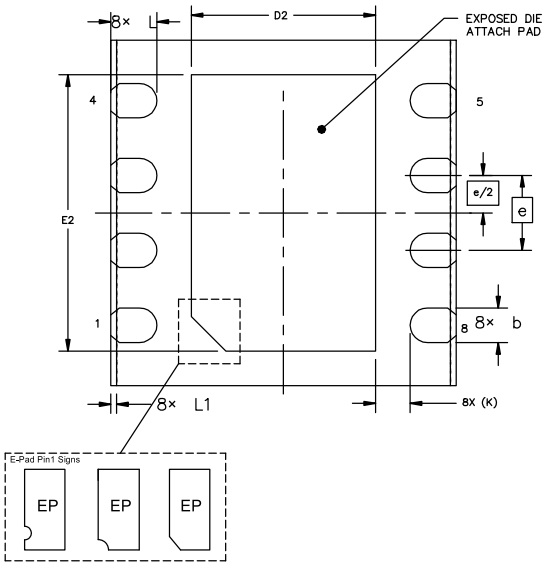

BOTTOM VIEW

NOTES

1. Do not include mold flash or protrusion.
2. This drawing is subject to change without notice.
3. The many types of E-pad Pin1 signs may appear in the product.

Symbol	Dimensions In Millimeters		Dimensions In Inches	
	MIN	MAX	MIN	MAX
A	0.800	0.900	0.031	0.035
A1	0.000	0.050	0.000	0.002
A2	0.150	0.250	0.006	0.010
A3	0.080	0.180	0.003	0.007
D	2.900	3.100	0.114	0.122
D2	1.500	1.700	0.059	0.067
E	2.900	3.100	0.114	0.122
b	0.250	0.400	0.010	0.016
E2	2.300	2.500	0.091	0.098
e	0.650 BSC		0.026 BSC	
L	0.350	0.450	0.014	0.018
L1	0.010	0.090	0.0004	0.004
K	0.300 REF		0.012 REF	

SOP-8

Package Outline Dimensions SO1(SOP-8-A)

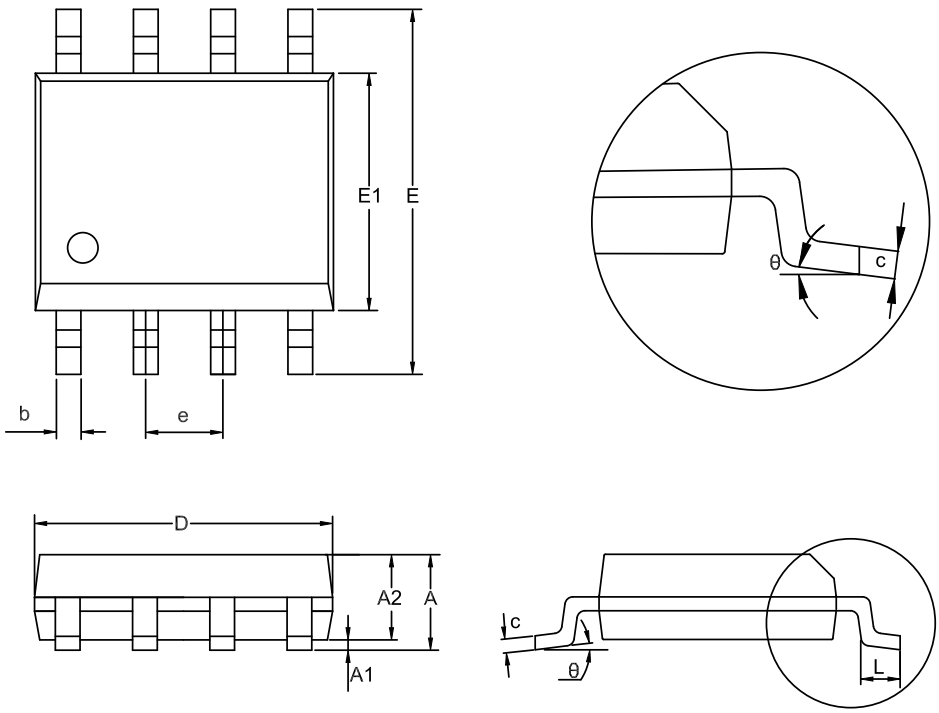

Symbol	Dimensions In Millimeters		Dimensions In Inches	
	MIN	MAX	MIN	MAX
A	1.350	1.750	0.053	0.069
A1	0.050	0.250	0.002	0.010
A2	1.250	1.550	0.049	0.061
b	0.330	0.510	0.013	0.020
c	0.170	0.250	0.007	0.010
D	4.700	5.100	0.185	0.201
E	5.800	6.200	0.228	0.244
E1	3.800	4.000	0.150	0.157
e	1.270 BSC		0.050 BSC	
L	0.400	1.000	0.016	0.039
θ	0	8°	0	8°

NOTES

1. Do not include mold flash or protrusion.
2. This drawing is subject to change without notice.

Order Information

Order Number	Operating Temperature Range	Package	Marking Information	MSL	Transport Media, Quantity	Eco Plan
TPT1051VQ-SO1R-S	−40 to 125°C	SOP8	T51VQ	MSL1	Tape and Reel, 4000	Green
TPT1051VQ-DF6R-S	−40 to 125°C	DFN3x3-8	T51VQ	MSL1	Tape and Reel, 4000	Green
TPT1051Q-SO1R-S	−40 to 125°C	SOP-8	1051Q	MSL1	Tape and Reel, 4000	Green
TPT1051Q-DF6R-S	−40 to 125°C	DFN3x3-8	1051Q	MSL1	Tape and Reel, 4000	Green

(1) MSL will be updated depending on the qualification report.

Green: 3PEAK defines "Green" to mean RoHS compatible and free of halogen substances.

IMPORTANT NOTICE AND DISCLAIMER

Copyright© 3PEAK 2012-2023. All rights reserved.

Trademarks. Any of the 思瑞浦 or 3PEAK trade names, trademarks, graphic marks, and domain names contained in this document /material are the property of 3PEAK. You may NOT reproduce, modify, publish, transmit or distribute any Trademark without the prior written consent of 3PEAK.

Performance Information. Performance tests or performance range contained in this document/material are either results of design simulation or actual tests conducted under designated testing environment. Any variation in testing environment or simulation environment, including but not limited to testing method, testing process or testing temperature, may affect actual performance of the product.

Disclaimer. 3PEAK provides technical and reliability data (including data sheets), design resources (including reference designs), application or other design recommendations, networking tools, security information and other resources "As Is". 3PEAK makes no warranty as to the absence of defects, and makes no warranties of any kind, express or implied, including without limitation, implied warranties as to merchantability, fitness for a particular purpose or non-infringement of any third-party's intellectual property rights. Unless otherwise specified in writing, products supplied by 3PEAK are not designed to be used in any life-threatening scenarios, including critical medical applications, automotive safety-critical systems, aviation, aerospace, or any situations where failure could result in bodily harm, loss of life, or significant property damage. 3PEAK disclaims all liability for any such unauthorized use.