High-Voltage Sense and Low-IQ Supervisory Circuits with Programmable Reset Delay

Features

- Qualified for Automotive Applications
  - AEC-Q100 Grade 1: T_A = −40°C to 125°C
- Supply Voltage Range: 2.4 V to 5.5 V (SENSE Pin Version)
- Wide Supply Voltage Range: 2.4 V to 36 V (VDD Pin Version)
- High Sense Voltage up to 36 V for the Sense Pin
- Very Low Quiescent Current: 2 μA Typical
- Fixed Threshold Voltage from 3.0 V to 12.0 V with 100-mV Step
- High Threshold Accuracy ±1.5% Typical
- Open-Drain Active Low $\overline{\text{RESET}}$ Output
- Green Product, SOT23-6 and SOT23-5 Package

Applications

- Automotive ECU
- EV Inverter
- Battery Charger Unit

Description

The TPV8368Q is a family of the supervisory circuits to monitor a voltage rail from 3.0 V to 12.0 V, asserting an active low open-drain $\overline{\text{RESET}}$ output when the voltage of the sense voltage (SENSE pin version) drops below a fixed threshold or when the VDD voltage (VDD pin version) drops below a fixed threshold. The $\overline{\text{RESET}}$ output remains low for the user-adjusted delay time by the external capacitor after the monitored voltage returns above the threshold with hysteresis.

The threshold voltage of the TPV8368Q device can achieve ±1.5% accuracy. The TPV8368Q has a very low typical quiescent current of 2 μA.

The TPV8368Q is available in the SOT23-6 and SOT23-5 package. Its operating temperature range is from −40°C to +125°C.

Typical Application Circuit

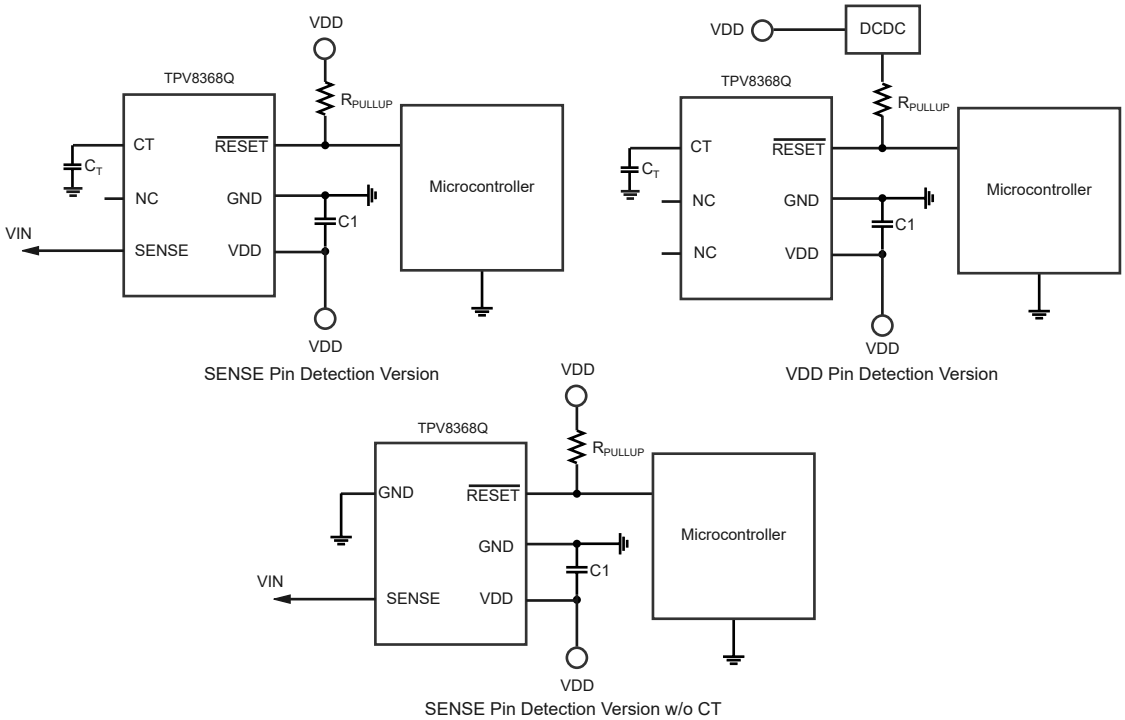

Table of Contents

Features 1
Applications 1
Description 1
Typical Application Circuit 1
Product Family Table 3
Revision History 3
Pin Configuration and Functions 4
Specifications 5
Absolute Maximum Ratings 5
ESD, Electrostatic Discharge Protection 5
Recommended Operating Conditions 5
Thermal Information 5
Electrical Characteristics 7
Typical Performance Characteristics 9
Detailed Description 10
Overview 10
Functional Block Diagram 10
Feature Description 11
Application and Implementation 12
Application Information 12
Typical Application 12
Tape and Reel Information 13
Package Outline Dimensions 14
SOT23-5 14
SOT23-6 15
Order Information 16
IMPORTANT NOTICE AND DISCLAIMER 17

Product Family Table

TPV8368 XX Q - XXXX- S

Package
S6TR: SOT23-6
S5TR: SOT23-5

Version Code
SA: 3.0V detection voltage
~ : 100mV step
YZ: 12V detection voltage

Device	Threshold Voltage (V_{IT})	Sense Pin	Marking	Package
TPV8368SAQ-S6TR-S	3.00	Sense	Q00	SOT23-6
TPV8368SKQ-S6TR-S (1)	4.00	Sense	Q10	SOT23-6
TPV8368SPQ-S6TR-S (1)	4.50	Sense	Q15	SOT23-6
TPV8368SZQ-S5TR-S	5.50	Sense	Q25	SOT23-5
TPV8368SZQ-S6TR-S (1)	5.50	Sense	Q25	SOT23-6
TPV8368TBQ-S6TR-S (1)	5.70	Sense	Q27	SOT23-6
TPV8368TYQ-S6TR-S (1)	8.00	Sense	Q50	SOT23-6
TPV8368USQ-S6TR-S (1)	10.00	Sense	Q70	SOT23-6
TPV8368VMQ-S6TR-S (1)	12.00	Sense	Q90	SOT23-6
TPV8368VNQ-S6TR-S (1)	3.00	VDD	Q00	SOT23-6
TPV8368VXQ-S6TR-S (1)	4.00	VDD	Q10	SOT23-6
TPV8368WCQ-S6TR-S (1)	4.50	VDD	Q15	SOT23-6
TPV8368WMQ-S6TR-S (1)	5.50	VDD	Q25	SOT23-6
TPV8368WOQ-S6TR-S (1)	5.70	VDD	Q27	SOT23-6
TPV8368XLQ-S6TR-S (1)	8.00	VDD	Q50	SOT23-6
TPV8368YFQ-S6TR-S (1)	10.00	VDD	Q70	SOT23-6
TPV8368YZQ-S6TR-S (1)	12.00	VDD	Q90	SOT23-6

(1) For new threshold voltage configurations, please contact the 3PEAK.

Revision History

Date	Revision	Notes
2022-12-01	Rev.A.0	Added reset timing chart and reset delay time equation
2023-07-07	Rev.A.1	Updated typical application circuit
2024-03-15	Rev.A.2	Updated typo
2024-03-28	Rev.A.3	Added SOT23-5 package
2024-05-10	Rev.A.4	Updated T_A, T_J in AMR table Added T_A, T_J in recommended table Updated Tape and Reel dimension.

Pin Configuration and Functions

SOT23-6 Package
Top View

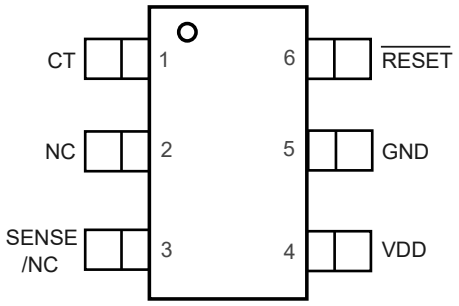

SOT23-5 Package
Top View

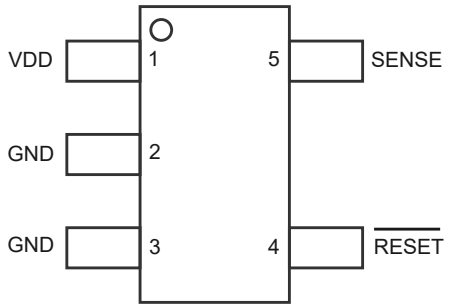

Table 1. Pin Functions: TPV8368Q

Pin		Name	I/O	Description
SOT23-6	SOT23-5			
4	1	VDD	P	Supply Voltage. A 0.1-μF ceramic capacitor is placed as close as to the V_{DD} pin.
3	5	SENSE/NC	I	SENSE Pin. It is used for monitoring voltage. If the voltage drops below the threshold voltage V_{IT}, the $\overline{RESET}$ is asserted. This pin is NC in the V_{DD} detection version device.
1		CT	I/O	Reset Delay Time Programming Pin. Connecting this pin to ground referenced capacitor (≥ 100 pF) gives a user-programmable reset delay time.
2		NC	-	Not connected.
6	4	$\overline{RESET}$	O	$\overline{RESET}$ Output. This pin is an active low open drain output or push-pull output. It is driven to a low impedance state when $\overline{RESET}$ is asserted by the voltage of the SENSE pin lower than the threshold V_{IT} or the VDD voltage lower than the threshold. $\overline{RESET}$ is low for the reset delay time programmed by the CT pin after the monitored voltage is above V_{IT}. A pulled-up resistor from 10 kΩ to 1 MΩ should be connected to VDD if it is open drain output.
5	2 , 3	GND	G	Ground. This pin should be connected to ground reference.

Specifications

Absolute Maximum Ratings

Parameter		Min	Max	Unit
	VDD to GND (SENSE Pin Detection Version)	−0.3	6.5	V
	VDD to GND (VDD Pin Detection Version)	−0.3	45	V
	Input Voltage of the SENSE Pin	−0.3	45	V
	Voltage of CT Pin	−0.3	6.5	V
	Output Voltage of $\overline{RESET}$ Pin	−0.3	6.5	V
	Current of $\overline{RESET}$ Pin		20	mA
T_J	Maximum Junction Temperature	−40	150	°C
T_A	Operating Temperature Range	−40	150	°C
T_{STG}	Storage Temperature Range	−65	150	°C
T_L	Lead Temperature (Soldering 10 sec)		260	°C

(1) Stresses beyond those listed under Absolute Maximum Ratings may cause permanent damage to the device. Exposure to any Absolute Maximum Rating condition for extended periods may affect device reliability and lifetime.
(2) This data was taken with the JEDEC low effective thermal conductivity test board.
(3) This data was taken with the JEDEC standard multilayer test boards.

ESD, Electrostatic Discharge Protection

Parameter		Condition	Minimum Level	Unit
HBM	Human Body Model ESD	ANSI/ESDA/JEDEC JS-001 (1)	±2000	V
CDM	Charged Device Model ESD	ANSI/ESDA/JEDEC JS-002 (2)	±1000	V

(1) JEDEC document JEP155 states that 500-V HBM allows safe manufacturing with a standard ESD control process.
(2) JEDEC document JEP157 states that 250-V CDM allows safe manufacturing with a standard ESD control process.

Recommended Operating Conditions

Parameter		Min	Typ	Max	Unit
V_{DD}	VDD Pin Detection	2.4		36	V
V_{DD}	SENSE Pin Detection	2.4		5.5	V
V_{SENSE}		0		36	V
T_A	Operation Temperature	-40		125	℃
T_J	Junction Temperature	-40		125	℃

Thermal Information

Package Type	θ_{JA}	θ_{JC}	Unit
SOT23-6	143.9	67.4	°C/W

Package Type	θ_{JA}	θ_{JC}	Unit
SOT23-5	187	110	°C/W

Electrical Characteristics

All test conditions: V_{DD} = 2.4 V to 36 V (VDD Pin Detection), T_a = −40°C to 125°C, R_{PULLUP} = 10 kΩ to V_{DD}, C_{CT} = 1000 pF, typical values are at T_a = +25°C, unless otherwise noted.

Parameter			Conditions	Min	Typ	Max	Unit
DC Specifications							
V_{DD}	Supply Voltage Range (VDD Pin Detection)		−40°C < T_a < 125°C	2.4		36.0	V
I_{DD}	Quiescent Current (I_Q)		V_{DD} = V_{IT} − 0.1 V		2.0	7.0	μA
			V_{DD} = V_{IT} + 1.0 V		2.0	7.5	μA
I_{OL}	Output Current of $\overline{RESET}$ pin		V_{DD} = 4.5 V, V_{DS} = 0.05 V			2	mA
$V_{IT, ERR}$	Negative-going Input Threshold Accuracy		T_a = 25°C	−1.5		1.5	%
			−40°C < T_a < 125°C	−3.0	±1.5	3.0	%
V_{HYS}	Hysteresis on V_{IT}		VDD pin detection		5	5.5	%
			VDD pin without hysteresis	0		10	mV
R_{CTDIS}	CT Pin Discharge NMOS on Resistance		V_{DD} = 13.0 V. V_{CD} = 0.5 V	0.5		3.4	kΩ
Switching Electrical Specifications							
t_D	Reset Delay Time	C_T = 1000 pF	Guaranteed by design and characterization		10		ms
		C_T = 10 nF			100		ms
t_{PHL}	Propagation Delay		V_{IH} = 1.05 V_{DD}, V_{IL} = 0.95 V_{DD}		20		μs

All test conditions: V_{DD} = 2.4 V to 5.5 V (SENSE Pin Detection), T_a = −40°C to 125°C, R_{PULLUP} = 10 kΩ to V_{DD}, C_{CT} = 1000 pF, typical values are at T_a = +25°C, unless otherwise noted.

Parameter			Conditions	Min	Typ	Max	Unit
DC Specifications							
V_{DD}	Supply Voltage Range (SENSE Pin Detection)		−40°C < T_a < 125°C	2.4		5.5	V
I_{DD}	Quiescent Current (I_Q)		V_{SENSE} = V_{IT} − 0.1 V		2.0	5.5	μA
			V_{SENSE} = V_{IT} + 1.0 V		2.0	6.2	μA
R_{SENSE}	SENSE Resistance			5		68	MΩ
I_{OL}	Output Current of $\overline{RESET}$ Pin		V_{DD} = 4.5 V, V_{DS} = 0.05 V, V_{SENSE} = V_{IT} − 0.1V			2	mA
$V_{IT, ERR}$	Negative-going Input Threshold Accuracy		T_a = 25°C	−1.5		1.5	%
			−40°C < T_a < 125°C	−3.0	±1.5	3.0	%
V_{HYS}	Hysteresis on V_{IT} (SENSE Pin)				5	5.5	%
R_{CTDIS}	CT Pin Discharge NMOS on Resistance		V_{DD} = 4.5 V, V_{SENSE} = 13.0 V, V_{CD} = 0.5 V	0.5		3.4	kΩ
Switching Electrical Specifications							
t_D	Reset Delay Time	no CT pin	Guaranteed by design and characterization		60		μs
		C_T = 1000 pF			10		ms
		C_T = 10 nF			100		ms
t_{PHL}	Propagation Delay		V_{IH} = 1.05 V_{DD}, V_{IL} = 0.95 V_{DD}		20		μs

Typical Performance Characteristics

All test conditions: V_{DD} = 5 V, V_A = +25°C, unless otherwise noted.

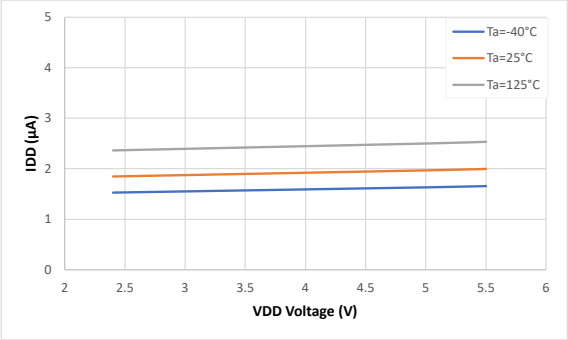

Figure 1. Supply Current vs. Input Voltage (V_{SENSE} = V_{IT} + 1 V)

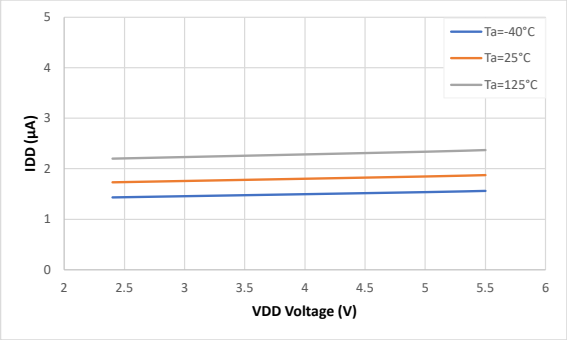

Figure 2. Supply Current vs. Input Voltage (V_{SENSE} = V_{IT} − 0.1 V)

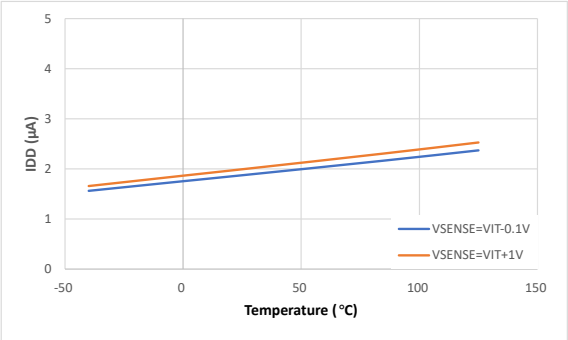

Figure 3. Supply Current vs. Temperature

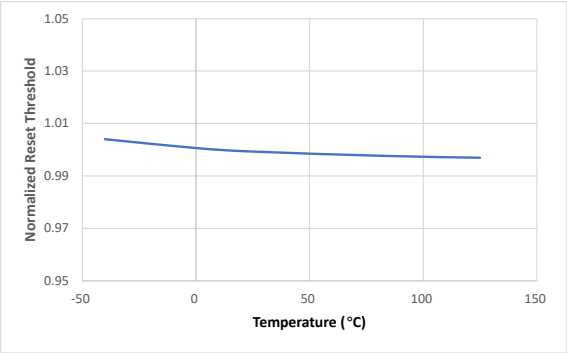

Figure 4. Normalized Reset Threshold vs. Temperature

Detailed Description

Overview

The TPV8368Q is a family of the supervisory circuits to monitor a voltage rail from 3.0 V to 12.0 V, asserting an active low open-drain $\overline{\text{RESET}}$ output when the voltage of the SENSE pin drops below a fixed threshold (SENSE pin version) or when the VDD voltage drops below a fixed threshold (VDD pin version). The $\overline{\text{RESET}}$ output remains low for the user adjusted delay time by the external capacitor or fixed delay time after the monitored voltage returns above the fixed threshold with hysteresis.

Functional Block Diagram

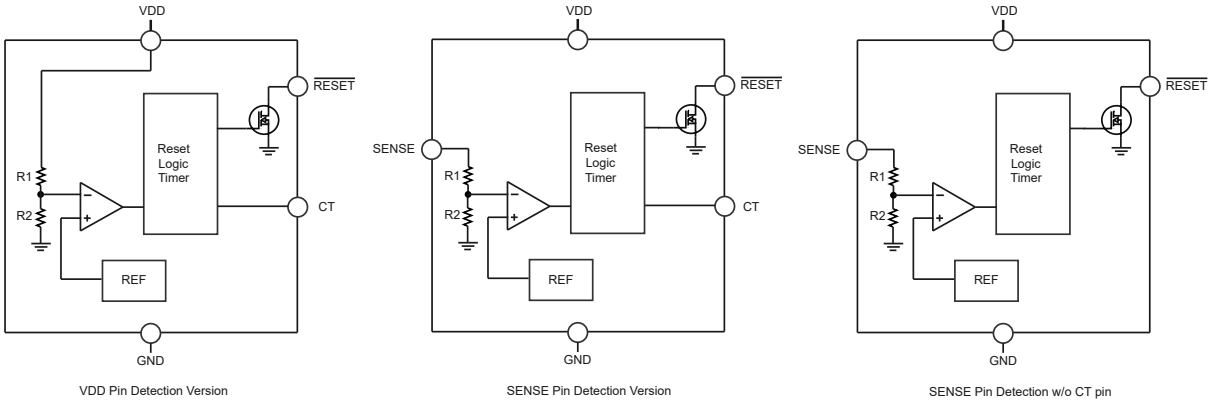

Figure 5. Functional Block Diagram

Feature Description

RESET Output

TPV8368Q features an active-low output, the reset signal is low for the SENSE pin voltage (SENSE pin version) drops below V_{IT} or the VDD pin voltage (VDD pin version) drops below V_{IT}. The reset remains asserted for the duration of the reset delay time (t_D) after the monitored voltage rises above the reset threshold. The two figures below show the reset outputs.

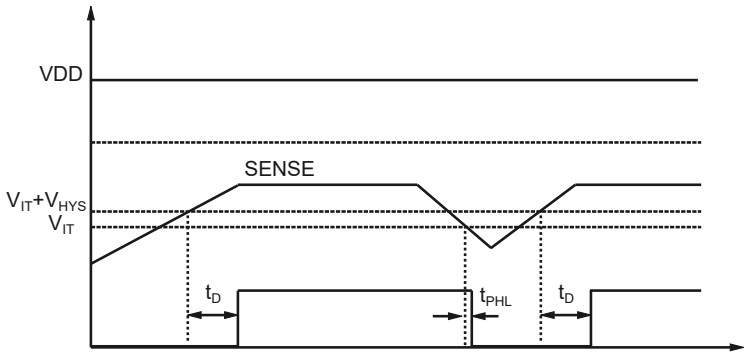

Figure 6. SENSE Pin Version Reset Timing

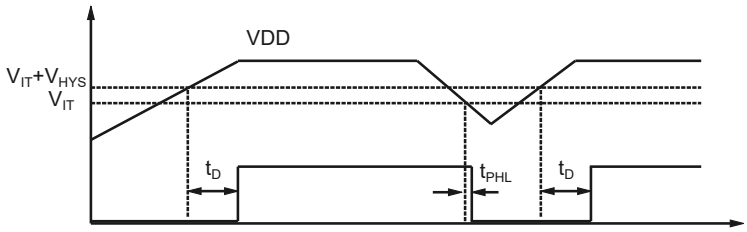

Figure 7. VDD Pin Version Reset Timing

RESET Delay Time

The TPV8368Q provides programmable reset delay time (t_D), which is realized by selecting a capacitor between CT and GND, the reset delay time (t_D) under given capacitor value is calculated using the Equation 1.

$$t_D\,(\text{ms}) = 10 \times C_{CT}\,(\text{nF}) \quad (1)$$

Application and Implementation

> Note
>
> Information in the following application sections is not part of the 3PEAK's component specification and 3PEAK does not warrant its accuracy or completeness. 3PEAK's customers are responsible for determining suitability of components for their purposes. Customers should validate and test their design implementation to confirm system functionality.

Application Information

The TPV8368Q is a family of supervisory circuits to monitor a wide voltage rail from 3.0 V to 12.0 V, and assert an active low open drain output when the reset threshold is triggered. The reset delay time can be programmed by an external capacitor.

Typical Application

The following figures show the typical application schematic.

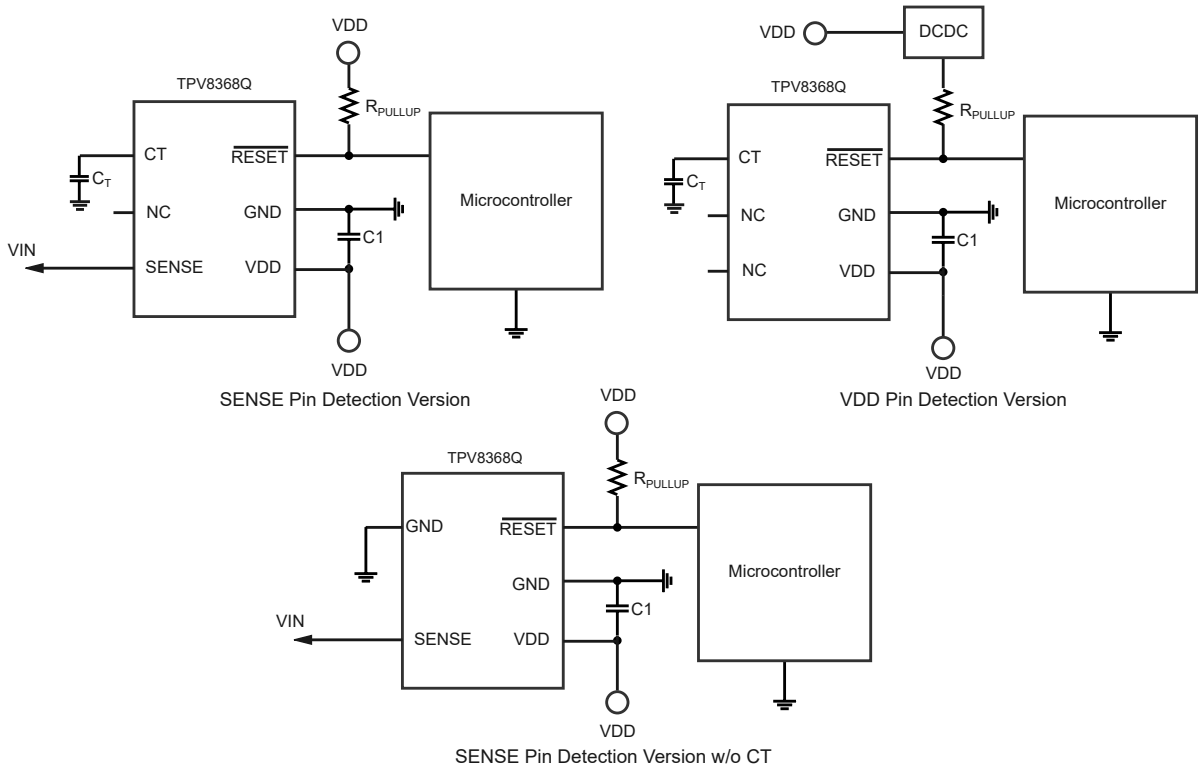

Figure 8. Typical Application Circuit

Tape and Reel Information

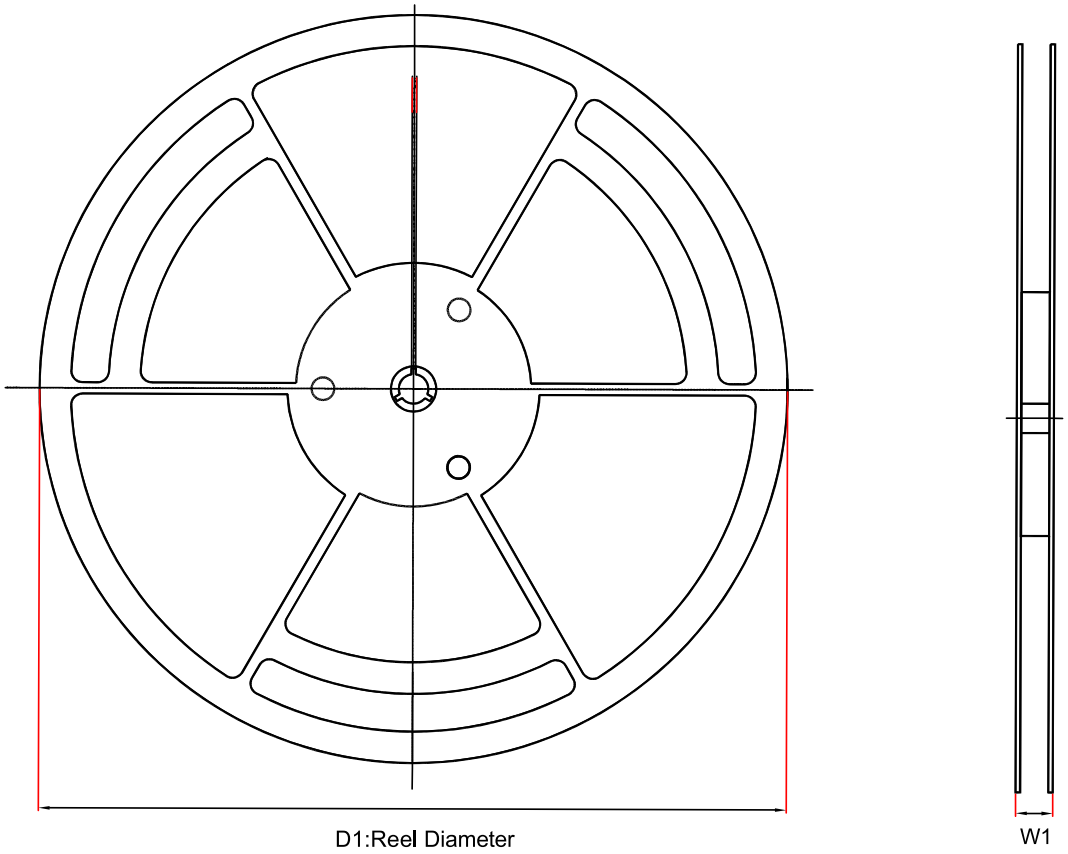

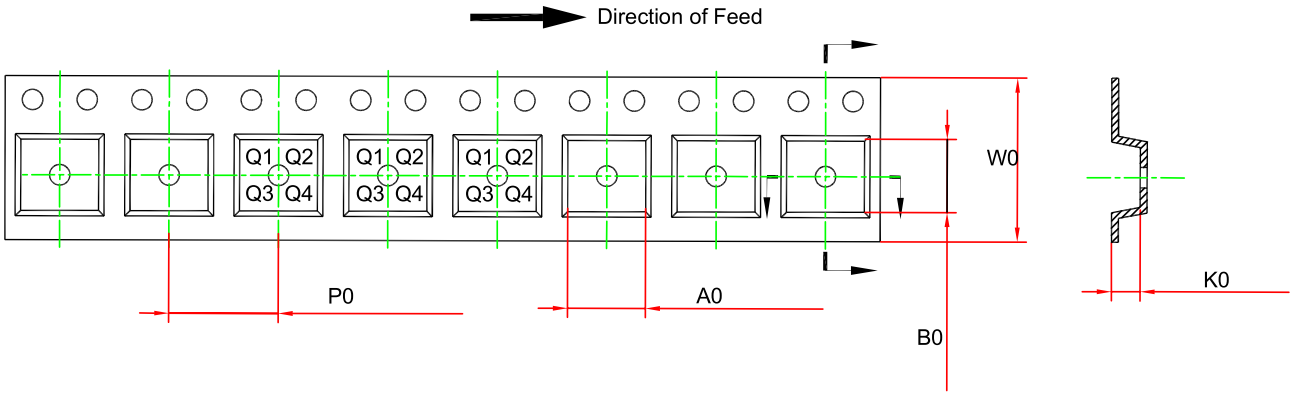

Order Number	Package	D1 (mm)	W1 (mm)	A0 (mm)	B0 (mm)	K0 (mm)	P0 (mm)	W0 (mm)	Pin1 Quadrant
TPV8368XXX-S6TR-S	SOT23-6	180.0	12	3.3	3.25	1.4	4.0	8.0	Q3
TPV8368XXX-S5TR-S	SOT23-5	180.0	12	3.3	3.25	1.4	4.0	8.0	Q3

Package Outline Dimensions

SOT23-5

Package Outline Dimensions S5T(SOT23-5-A)

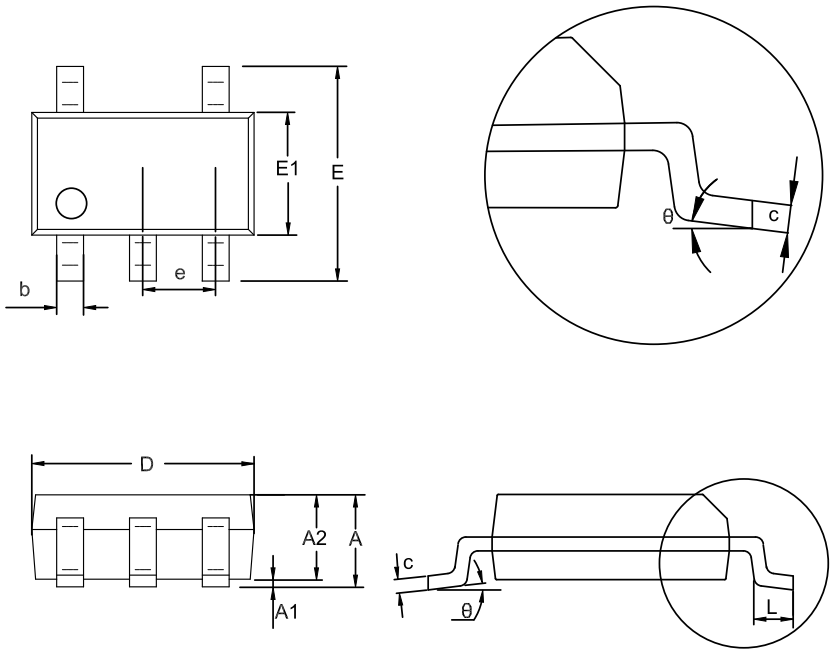

Symbol	Dimensions In Millimeters		Dimensions In Inches	
	MIN	MAX	MIN	MAX
A	1.050	1.250	0.041	0.049
A1	0.000	0.150	0.000	0.006
A2	1.000	1.200	0.039	0.047
b	0.280	0.500	0.011	0.020
c	0.100	0.230	0.004	0.009
D	2.820	3.020	0.111	0.119
E	2.600	3.000	0.102	0.118
E1	1.500	1.720	0.059	0.068
e	0.950 BSC		0.037 BSC	
L	0.300	0.600	0.012	0.024
θ	0	8°	0	8°

NOTES

1. Do not include mold flash or protrusion.
2. This drawing is subject to change without notice.

SOT23-6

Package Outline Dimensions S6T(SOT23-6-A)

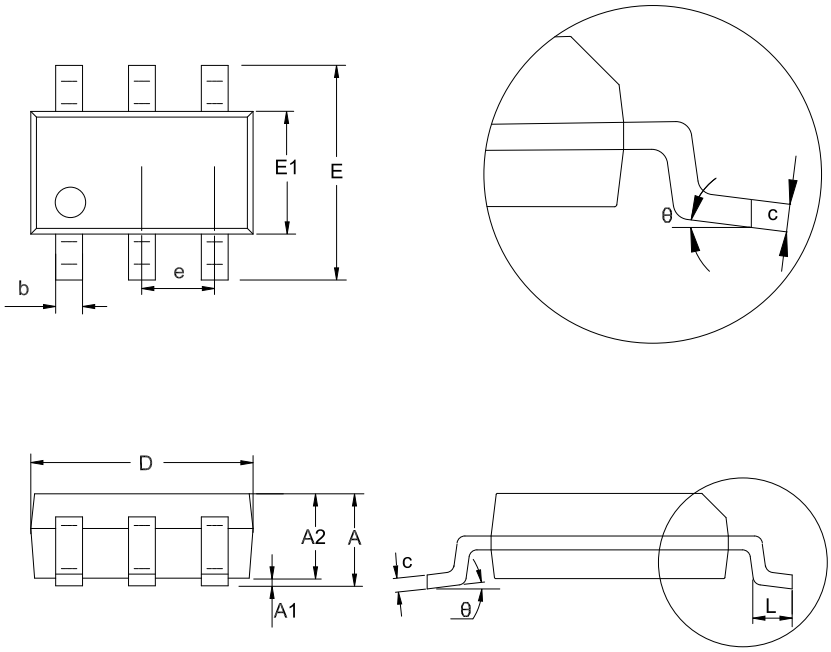

Symbol	Dimensions In Millimeters		Dimensions In Inches	
	MIN	MAX	MIN	MAX
A	1.050	1.250	0.041	0.049
A1	0.000	0.150	0.000	0.006
A2	1.000	1.200	0.039	0.047
b	0.280	0.500	0.011	0.020
c	0.100	0.230	0.004	0.009
D	2.820	3.020	0.111	0.119
E	2.600	3.000	0.102	0.118
E1	1.500	1.720	0.059	0.068
e	0.950 BSC		0.037 BSC	
L	0.300	0.600	0.012	0.024
θ	0	8°	0	8°

NOTES

1. Do not include mold flash or protrusion.
2. This drawing is subject to change without notice.

Order Information

Order Number	Operating Temperature Range	Package	Marking Information	MSL	Transport Media, Quantity	Eco Plan
TPV8368SAQ-S6TR-S	−40 to 125°C	SOT23-6	Q00	3	Tape and Reel, 3000	Green
TPV8368SKQ-S6TR-S (1)	−40 to 125°C	SOT23-6	Q10	3	Tape and Reel, 3000	Green
TPV8368SPQ-S6TR-S (1)	−40 to 125°C	SOT23-6	Q15	3	Tape and Reel, 3000	Green
TPV8368SZQ-S5TR-S	−40 to 125°C	SOT23-5	Q25	3	Tape and Reel, 3000	Green
TPV8368SZQ-S6TR-S (1)	−40 to 125°C	SOT23-6	Q25	3	Tape and Reel, 3000	Green
TPV8368TBQ-S6TR-S (1)	−40 to 125°C	SOT23-6	Q27	3	Tape and Reel, 3000	Green
TPV8368TYQ-S6TR-S (1)	−40 to 125°C	SOT23-6	Q50	3	Tape and Reel, 3000	Green
TPV8368USQ-S6TR-S (1)	−40 to 125°C	SOT23-6	Q70	3	Tape and Reel, 3000	Green
TPV8368VMQ-S6TR-S (1)	−40 to 125°C	SOT23-6	Q90	3	Tape and Reel, 3000	Green
TPV8368VAQ-S6TR-S (1)	−40 to 125°C	SOT23-6	Q00	3	Tape and Reel, 3000	Green
TPV8368VXQ-S6TR-S (1)	−40 to 125°C	SOT23-6	Q10	3	Tape and Reel, 3000	Green
TPV8368WCQ-S6TR-S (1)	−40 to 125°C	SOT23-6	Q15	3	Tape and Reel, 3000	Green
TPV8368WMQ-S6TR-S (1)	−40 to 125°C	SOT23-6	Q25	3	Tape and Reel, 3000	Green
TPV8368WOQ-S6TR-S (1)	−40 to 125°C	SOT23-6	Q27	3	Tape and Reel, 3000	Green
TPV8368XLQ-S6TR-S (1)	−40 to 125°C	SOT23-6	Q50	3	Tape and Reel, 3000	Green
TPV8368YFQ-S6TR-S (1)	−40 to 125°C	SOT23-6	Q70	3	Tape and Reel, 3000	Green
TPV8368YZQ-S6TR-S (1)	−40 to 125°C	SOT23-6	Q90	3	Tape and Reel, 3000	Green

(1) For future products, contact the 3PEAK factory for more information and samples.

Green: 3PEAK defines "Green" to mean RoHS compatible and free of halogen substances.

IMPORTANT NOTICE AND DISCLAIMER

Copyright© 3PEAK 2012-2024. All rights reserved.

Trademarks. Any of the 思瑞浦 or 3PEAK trade names, trademarks, graphic marks, and domain names contained in this document /material are the property of 3PEAK. You may NOT reproduce, modify, publish, transmit or distribute any Trademark without the prior written consent of 3PEAK.

Performance Information. Performance tests or performance range contained in this document/material are either results of design simulation or actual tests conducted under designated testing environment. Any variation in testing environment or simulation environment, including but not limited to testing method, testing process or testing temperature, may affect actual performance of the product.

Disclaimer. 3PEAK provides technical and reliability data (including data sheets), design resources (including reference designs), application or other design recommendations, networking tools, security information and other resources "As Is". 3PEAK makes no warranty as to the absence of defects, and makes no warranties of any kind, express or implied, including without limitation, implied warranties as to merchantability, fitness for a particular purpose or non-infringement of any third-party's intellectual property rights. Unless otherwise specified in writing, products supplied by 3PEAK are not designed to be used in any life-threatening scenarios, including critical medical applications, automotive safety-critical systems, aviation, aerospace, or any situations where failure could result in bodily harm, loss of life, or significant property damage. 3PEAK disclaims all liability for any such unauthorized use.

This page intentionally left blank